4000124050-2 10.03

Instructions for Use Installation and Servicing

To be left with the user

Themaclassic F24E

Fanned Flue Combination Boiler

G.C.No. 47-047-35

Themaclassic F18E SB

Fanned Flue System Boiler

G.C. No.41-920-35

F24E shown

spares & parts online
IBASIS.co.uk©

Saunier Duval

Hepworth Heating Ltd., Nottingham Road, Belper, Derbyshire. DE56 1JT

Guarantee Registration

Thank you for installing a new Saunier Duval appliance in your home.
Saunier Duval appliances' are manufactured to the very highest standard so we are pleased to offer our customers' a Comprehensive Guarantee.
This product is guaranteed for 24 months from the date of installation or 30 months from the date of manufacture, whichever is the shorter, for parts. In addition this product is guaranteed for 12 months from the date of installation or 18 months from the date of manufacture, whichever is the shorter, for labour.
The second year of the parts guarantee, from the beginning of the 13th month onwards after installation, is conditional upon the boiler having been serviced by a CORGI registered gas installer, in accordance with the manufacturer's recommendations. We strongly recommend regular servicing of your gas appliance, but where the condition is not met, any chargeable spare parts or components issued within the applicable guarantee period still benefit from a 12 month warranty from the date of issue by the manufacturer.

We recommend you complete and return as soon as possible your guarantee registration return literature, supplied in the document envelope.

If your guarantee registration return literature is missing you can obtain a copy by telephoning

Saunier Duval Service on 00 44 (0)1773 828100.

RECORD YOUR SAUNIER DUVAL APPLIANCE DIRECT BY CALLING

0208 247 9857

Customer Service:

Saunier Duval GB GREAT BRITAIN:
Tel. 00 44 (0)1773 828100
Fax. 00 44 (0)1773 828070
Hepworth Heating Ltd.,
Nottingham Road, Belper, Derbyshire. DE56 1JT

Saunier Duval IE IRELAND:
Tel. 00 353 (0)14191919
Fax. 00 353 (0)14584806
Hevac,
Muirfield Drive
Naas Road
Dublin 12

Technical Advice Line:

Tel. 00 44 (0)1773 828400

General and Sales enquiries :

Tel. 00 44 (0)1773 824141
Fax. 00 44 (0)1773 820569

benchmark
The code of practice for the installation, commissioning & servicing of gas central heating

Contents

CONTENTS	DESCRIPTION	SECTION	PAGE No.
INSTRUCTION FOR USE	Important Information		4
	Draining and Filling		5
	Appliance Introduction		5
	Appliance Safety Devices		6
	Maintenance and Servicing		6
	User Controls and Lighting		7
	Analogue Programmer **F24E only**		8
	Digital Programmer Kit **F24E only**		8
INSTALLATION INSTRUCTIONS	Technical Data	1	11
	General Information	2	12
	Heating System Design	3	13
	Domestic Hot Water System Design **F24E only**	4	15
	Boiler Schematic **F24E**	5	16
	Boiler Schematic **F18E SB**	5a	16
	Boiler Location, flue and ventilation	6	17
	Fixing Jig	7	18
	Piping System Installation	8	19
	Boiler installation	9	20
	Horizontal Telescopic Top Flue Installation	10	21
	Horizontal Top Flue Installation	10a	23
	Electrical Connection	11	25
	Commissioning	12	27
	Changing Gas Type	13	29
	Bypass Settings	14	29
SERVICING INSTRUCTIONS	Routine Cleaning and Inspection	15	30
	Fault Finding	16	34
	Wiring Diagram **F24E**	17	40
	Wiring Diagram **F18E SB**	17	41
	Replacement of Parts	18	42
	Spare Parts	19	52

Important Information

Gas safety (Installation and use) Regulations

In your interests and that of gas safety, it is the law that ALL gas appliances are installed and serviced by a competent person in accordance with the regulations.

Gas leak or fault

WARNING: If a gas leak or fault exists or is suspected, turn the boiler off and consult the local gas supply company or your installation/service company.

Testing and Certification

This boiler is tested and certificated for safety and performance. It is therefore important that no alteration is made to the boiler, without permission, in writing, from Hepworth Heating Ltd.

Any alteration not approved by Hepworth Heating Ltd., could invalidate the certification, boiler warranty and may also infringe the current issue of the Statutory Requirements. The requirements are: The installation of this boiler must be carried out by a competent person in accordance with the current rules in force in the countries of destination at the time of installation, for Ireland, install in accordance with I.S.813 "Domestic Gas Installation". Manufacture's instructions supplied must not be taken as overriding statutory requirements.

CE Mark

This boiler meets the requirements of Statutory Instrument No. 3083 The boiler (Efficiency) Regulations, and therefore is deemed to meet the requirements of Directive 92/42/EEC on the efficiency requirements for new hot water boilers fired with liquid or gaseous fuels.

Type test for purposes of Regulation 5 certified by: Notified body 0049.

Product/production certified by: Notified body 0049.

The CE mark on this appliance shows compliance with:

1. Directive 90/396/EEC on the approximation of the laws of the Member States relating to appliances burning gaseous fuels.

2. Directive 73/23/EEC on the harmonization of the Laws of the Member States relating to the electrical equipment designed for use within certain voltage limits.

3. Directive 89/336/EEC on the approximation of the Laws of the Member States relating to electromagnetic compatibility.

Control of Substances Hazardous to Health

The adhesives and sealants used in this appliance are cured and give no known hazard in this state.

Insulation pads / ceramic fibre

These can cause irritation to skin, eyes and the respiratory tract.
If you have a history of skin complaint you may be susceptible to irritation. High dust levels are usual only if the material is broken.
Normal handling should not cause discomfort, but follow normal good hygiene and wash your hands before eating, drinking or going to the lavatory.
If you do suffer irritation to the eyes or severe irritation to the skin seek medical attention.
The insulation is composed of non-combustible material.

Electrical Supply

WARNING: This boiler must be earthed.

All system components shall be of an approved type and shall be connected in accordance with the current issue of BS7671 and any applicable local regulations.

External wiring must be correctly earthed, polarised and in accordance with the relevant standards.

In GB this is BS 6891.

In IE this is the current edition of I.S.813 "Domestic gas installation".

Connection of the boiler and system controls to the mains supply must be through a common isolator and must be fused at 3A, maximum. This method of connection must be by a fused double pole isolating switch, with a minimum contact separation of 3mm on both poles. The switch should be readily accessible and preferably adjacent to the appliance. It should supply the appliance only and be easily identifiable as so doing.

Alternatively, an unswitched shuttered socket outlet and 3A fused 3 pin plug, both to the current issue of BS1363 may be used provided that they are not used in a room containing a bath or shower.

Wiring to the boiler must be PVC 85°C insulated cable, not less than 0.75mm^2 (24/0.20mm).

Manual Handling Guidance

During the appliance installation it will be necessary to employ caution and assistance whilst lifting as the appliance exceeds the recommended weight for a one man lift.

In certain situations it may be required to use a mechanical handling aid.

Take care to avoid trip hazards, slippery or wet surfaces.

Heating System Controls

The heating system must be controlled as described in the relevant part of the current issue of :

Building Regulations, approved document L1, and the references:

1) GIL 59, 2000: Central heating system specification (CheSS) and

2) GPG 302, 2001: Controls for domestic central heating system and hot water. BRECSU.

3) The domestic heating and hot water guide to the building regulations 2001.

Thermostatic radiator valves may be installed, however they must not be fitted in a room where the room thermostat is located.

Air in the heating system

Persistent air in the heating system may indicate leaks in the system or corrosion taking place. Call your Installation/Servicing company.

Protection Against Freezing

The appliance has a built in frost protection programme as long as the electricity and gas are left switched on.

This device operates the burner and system pump when the temperature inside the boiler falls below 6°C.

Any other exposed areas of the system should be protected by a separate frost thermostat.

Draining and Filling

Caution: The boiler is installed as part of a sealed system which must only be drained and filled by a competent person.

If the mains electricity and gas are to be turned off for any long periods during severe weather, it is recommended that the whole system, including the boiler, refer to diagram 1, should be drained to avoid the risk of freezing. Make sure that, if fitted, the immersion heater in the cylinder is switched off.

If in doubt, consult your servicing company.

F24E Only

• **If the boiler loses water:** the pressure will be indicated, see diagram 1 **(a)** and the boiler ON indicator **(b)** will flash red indicating a fault. Fill the system by the filling device **(c)** at the bottom of the boiler until the pressure gauge reads 1.0 bar.

A mains inlet pressure of 2.0 bar is required to reach a fill pressure of 1.0 bar.

Reset boiler: refer to diagram 2, turn the On/Off switch to **(0),** wait for five seconds. Turn the On/Off switch to **(I)** to reset the appliance.

F18E SB Only

• **If the boiler loses water:** the pressure will be indicated, see diagram 1 **(a)** and the running lamp **(b)** will flash red indicating a fault. Fill the system with the external filling device until the pressure gauge reads 1.0 bar.

Reset boiler: refer to diagram 2, turn the On/Off switch to **(0),** wait for five seconds. Turn the On/Off switch to **(I)** to reset the appliance.

• **Warning:** *Take care not to overfill the boiler*. At a pressure of 2.5 bar or above indicating over pressure, the boiler ON indicator **(b)** will flash red indicating a fault. The pressure must be reduced to 1.0 bar by opening the drain valve, refer to diagram 1. If the fault continues call the relevant Servicing organisation or Saunier Duval Service using the telephone number on the inside front cover of this literature.

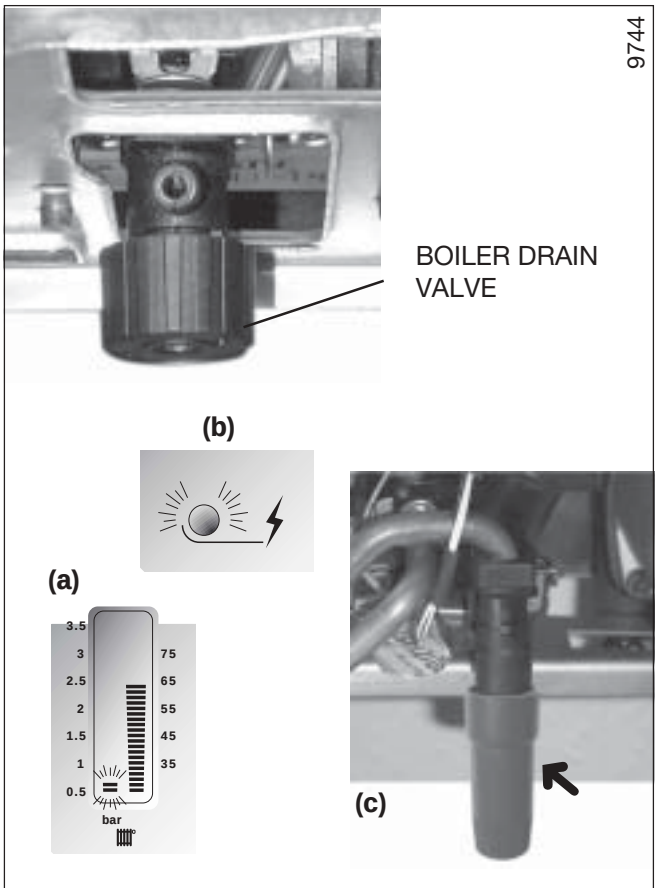

Diagram 1

Appliance Introduction

The **F24E** and **F18E SB** boilers are wall mounted modulating boilers with electronic ignition providing central heating and hot water.

The boiler is of the II_{2H3+} category and is for use with natural Gas (G20) as distributed in the United Kingdom, but can be converted to use Butane (G30), Propane (G31) with the appropriate kit.

Thema Classic F24E LPG boilers are factory set for use on Butane (G30) and Propane (G31) without requirement for any additional adjustments.

The boiler has a fan assisted balanced flue which both discharges the products of combustion to and draws the combustion air from the outside of the room.

This boiler is not suitable for outdoor installation.

This boiler may be installed in any room, although particular attention is drawn to the installation of a boiler in a room containing a bath or shower where reference must be made to the relevant requirements.

Any electrical switch or boiler control utilising mains electricity should be placed so that it cannot be touched by a person using the bath or shower.

In GB this is the current I.E.E. WIRING REGULATIONS and BUILDING REGULATIONS.

In IE reference should be made to the current edition of I.S.813 "Domestic Gas Installations" and the current ETCI rules.

The central heating and domestic hot water (F24E only) temperatures are user adjustable.

F24E Only. Domestic hot water demand always has priority over heating demand.

The boiler is designed for use as part of a sealed water central heating system with fully pumped circulation. The pump, expansion vessel and associated safety devices are all fitted within the boiler.

The boiler can be installed against either an external wall or on an adjacent inside wall, that is, the flue system will pass directly to the rear or to either side to the terminal fitted on the outside wall face.

These instructions should be carefully followed for the safe and economical use of your boiler. The 'User Controls and Lighting' section describes how to safely use the boiler.

Note: The boiler serial number is marked on the data label attached to the rear of the control box.

Accessories

A range of accessories are available.

For further information contact your supplier.

Appliance Safety Devices

Air flow rate safety device

If the flue is obstructed, the built in safety system will turn the boiler OFF, the fan will continue to run. The boiler will be ready to operate when the fault has been cleared.

Overheating safety

In the event of the boiler overheating the safety devices will cause a safety shutdown. If this happens, call your Installation/ Servicing company.

Electrical supply failure

The boiler will not operate without an electrical supply. Normal operation of the boiler should resume when the electrical supply is restored.

Reset any central heating system controls, to resume normal operation.

If the boiler does not resume normal operation turn the mains reset switch off and on. If the boiler does not resume normal operation it is advisable to consult your installation / servicing company.

Frost protection

The appliance has a built in frost protection device that protects the boiler from freezing. With the gas and electric supplies ON and irrespective of any room thermostat setting, the frost protection device will light the boiler when the temperature of the boiler water falls below 6°C.

When the temperature reaches 16°C, the boiler stops.

Any other exposed areas of the system should be protected by a separate frost thermostat.

Heating safety valve

CAUTION: A heating safety valve with a discharge pipe is fitted to this boiler.

The valve **MUST NOT BE TOUCHED** except by a competant person. If the valve discharges at any time, switch the boiler off and isolate it from the electrical supply. Contact your installation/ service company.

Maintenance and Servicing

Cleaning

WARNING: This appliance contains metal parts (components) and care should be taken when handling and cleaning with particular regard to edges of sheet metal parts to avoid any possibility of personal injury.

The boiler casing can be cleaned with a damp cloth, followed by a dry cloth to polish.

Do not use abrasive or solvent cleaners.

Maintenance and Servicing

To ensure the continued efficient and safe operation of the appliance it is recommended that it is checked and serviced as necessary at regular intervals, but in general once a year should be enough, refer to guarantee registration on the inside front cover of this literature.

If this appliance is installed in a rented property there is a duty of care imposed on the owner of the property by the current issue of the Gas Safety (Installation and Use) Regulations, Section 35.

Servicing/maintenance should be carried out by a competent person in accordance with the rules in force in the countries of destination.

To obtain service, please call the relevant service organisation or Saunier Duval Service using the telephone number on the inside front cover of this literature.

Please be advised that the 'Benchmark' logbook should be completed by the engineer on completion of commissioning and servicing.

All CORGI Registered Installers carry a CORGI ID card, and have a registration number. Both should be recorded in your benchmark Logbook. You can check your installer is CORGI registered by calling CORGI direct on: 00 44 (0) 1256 372300.

Spare Parts

REMEMBER, When replacing a part on this appliance, use only spare parts that you can be assured conform to the safety and performance specification that we require. Do not use reconditioned or copy parts that have not been clearly authorised by Hepworth Heating Ltd.

If a part or advice is required contact the relevant service organisation or Heatcall using the telephone number on the inside front cover of this booklet.

Please quote the name of the appliance, this infomation will be on the name badge on the front of the appliance.

11880

Central heating temperature selector
minimum setting (approx. 38˚C) up to maximum setting (approx. 73°C).

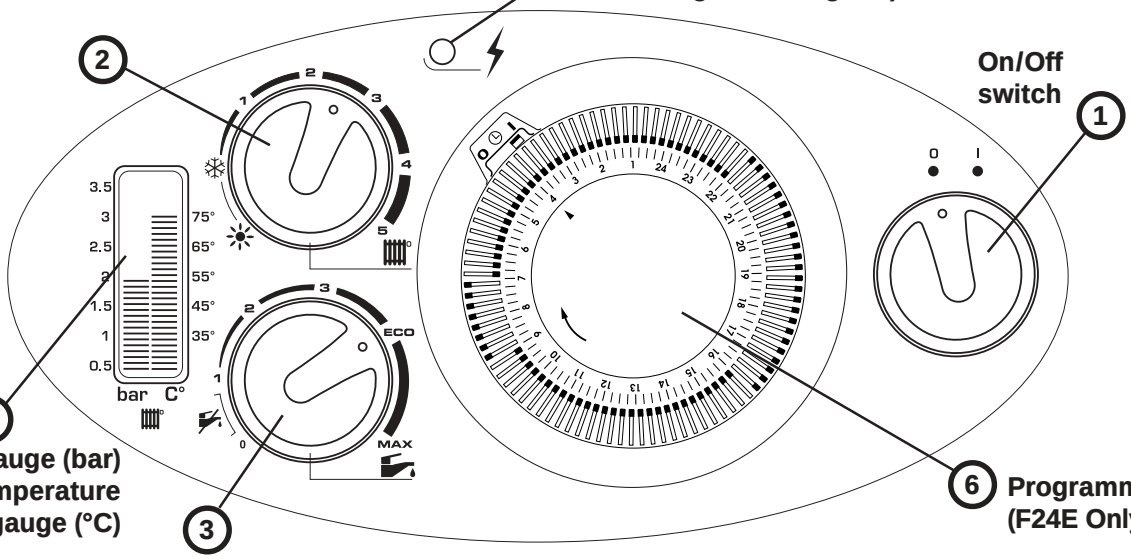

Domestic hot water temperature selector (F24E Only)
minimum setting approx. 38˚C up to maximum setting 60˚C.

The **ECO** setting is ideally suited for all the requirements of normal family use (showers, washing up etc.). The maximum setting should be reserved for occasional use when very hot water is required.

1. Lighting the boiler :

Make sure that:

- The boiler is connected to the electrical supply.
- The gas service cock is open.
- The room thermostat is calling for heat (if fitted).

- Turn the On/Off switch (1) to **ON (I)**
- The boiler ON indicator (5) will illuminate green.

2. Stop the boiler :

- Turn the On/Off switch (1) to **OFF (0)** the electrical supply is OFF.

3. Domestic hot water adjustment (F24E Only) : (3)

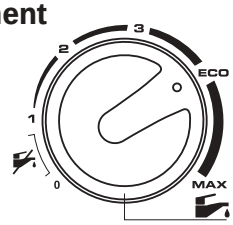

- **Position (0):** Domestic hot water OFF
- **Position (I) and ECO:** Domestic hot water between approx. 38˚C and 50˚C
- **ECO:** Maximum recommended for constant use
- **Between ECO and maxi:** Occasional use for water above approx. 50˚C

4. Heating temperature adjustment : (2)

- **Winter:** Set the control knob between **1 and 5 (**Heating ON**)**
- **Summer:** Set the control knob to ☀ (Heating OFF)

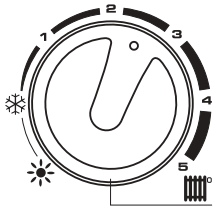

5. If a fault occurs (indicated by red flashing light) : (5)

- **Reset boiler:** Turn the On/Off switch to **(0)**, wait for five seconds. Turn the On/Off switch to **(I)** the boiler is reset. If the fault continues call your Installation/Servicing company or Saunier Duval Service using the telephone number on the inside front cover of this literature.

6. Pressure gauge: (4)

- The boiler pressure gauge will show a reading between 1.0 and 1.5 bar.
Refer to Section Draining and Filling if required.

Diagram 2

Analogue Programmer (F24E Only)
Part No. A20086. Fitted as standard.

Setting the time, see diagram 3

• Rotate the dial clockwise, by hand, until the indicator arrow is pointing to the current time.

Note: The time is set in 24 hour format.

Setting the programme "on and off" times, see diagram 3

• Select the **on** times by pushing the black tappets to the outside.

• Select the **off** times by pushing the black tappets to the inside.

To override or advance the programmer

The clock has a manual on/off switch which operates as follows:

Upper position	**I**	:	Heating on continuously
Middle position	◷	:	Heating on timed
Lower position	**0**	:	Heating off

To override or advance the programmer

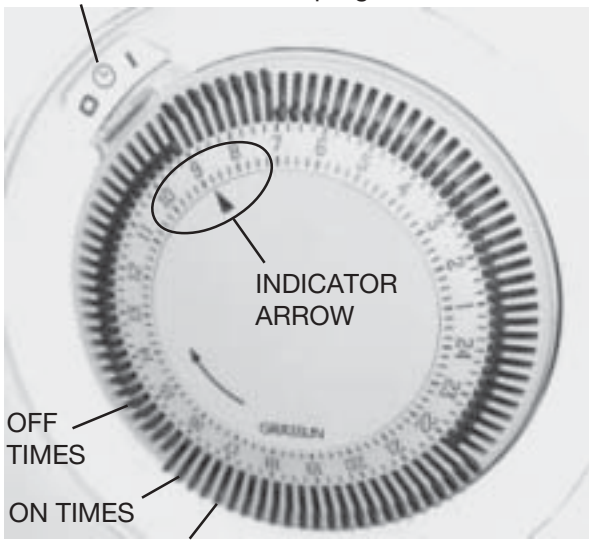

Diagram 3

Digital Programmer Kit. (F24E Only)
Part No. A20087. Not fitted as standard.

KEYPAD DESCRIPTION

See diagram 4 for position of keypads as described below,

Time/Automatic Run Mode selection

Prog. Programme selection

Res.* Reset clears all settings

◷ ON/OFF selector in Prog. Mode, Manual Override selector in Run Mode

±1h* Summer/Winter time setting

h Sets the Hour (12: - - AM)

m Sets the Minute (- -: 01 AM)

Day Sets Day(s) for time and programmes

*Recessed keys; use a pen point to press

Diagram 4

LCD Display

The LCD incorporates a number of different elements to display various data and information.

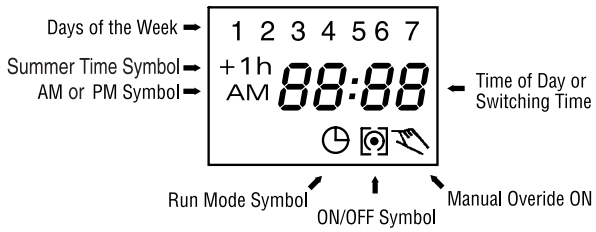

Programmes

The Digital Programmer will accept up to 20 events

Each event consists of:

1. An ON or OFF command
2. Time of day (Hour and Minute)
3. Single day or multiple days

An event is required for each ON and OFF.

Programmer Instructions for Use

NOTE: MULTIPLE ON OR OFF EVENTS MAY BE PROGRAMMED, SEE EXAMPLE.

BEFORE PROCEEDING WITH SETTING THE TIME AND PROGRAMMING THE UNIT, PRESS THE RESET KEY TO CLEAR ALL DATA FROM THE MEMORY.

Selecting AM/PM or 24 Hour Time

After pressing reset, the display may show AM (below). The numbered day symbols will be flashing on and off.

If the display does not show AM, it is in 24 hour time. To change to AM/PM mode, press and hold the **h** key and press the **±1h** key once. AM will appear in display.

If display is in AM/PM mode and 24 hour time mode is desired, press and hold the **h** key, press the **±1h** key once.

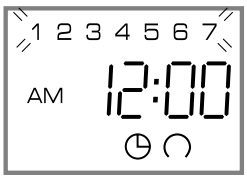

Setting the Time

IF THE **h** AND **m** KEYS ARE HELD DOWN LONGER THAN 2 SECONDS, THE NUMBERS WILL ADVANCE RAPIDLY.

Press and hold the ◷ key during the following:

(If British Summer Time is in effect, press **±1h** first)

1. Press **h** to advance to the current hour (while holding down the ◷ key)

2. Press **m** to advance to the current minute (while holding down the ◷ key)

3. Press **Day** repeatedly to advance to current day (while holding down the ◷ key)

Day Key Selections

Press Day Key	Display Shows	Days
0 times	1 2 3 4 5 6 7	Every Day
1 time	1 2 3 4 5 6	Mon.–Sat.
2 times	1 2 3 4 5	Mon.–Fri.
3 times	6 7	Sat. & Sun.
4 times	1	Monday
5 times	2	Tuesday
6 times	3	Wed.
7 times	4	Thursday
8 times	5	Friday
9 times	6	Saturday
10 times	7	Sunday

NOTE: If the days are flashing, it indicates the day of the week was not set when setting the time. The timer cannot be programmed unless the day of the week is entered.

Manual GMT/BST Time Changeover

Each year, in the Spring, press **±1h** to advance the time an hour. In the Autumn, press **±1h** to set back an hour.

Programming 24 Hour or 7 Day Schedules

It may be helpful to write out the programme schedules before beginning.

THE CURRENT TIME OF DAY AND DAY OF WEEK MUST BE SET PRIOR TO PROGRAMMING. SEE "SETTING THE TIME"

Example

Event 1: ON at 7:00AM Monday through Saturday

Event 2: OFF at 5:00PM Monday through Friday

Event 3: OFF at 7:00PM Saturday

Three events need to be entered.

Press **Prog.** key only once. Display shows:

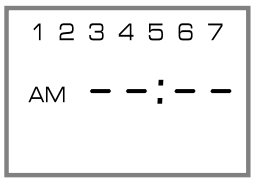

Event 1 (ON at 7:00AM Monday through Saturday)

Press ☝ key once. ON symbol ⦿ appears

Press **h** key to 07AM

Press **m** key once to 00

Press **Day** key once 1 2 3 4 5 6 is displayed

Press **Prog.** key to enter

Event 2 (OFF at 5:00PM Monday through Friday)

Press ☝ key twice. OFF symbol ◯ appears

Press **h** key to 05PM

Press **m** key once to 00

Press **Day** key two times 1 2 3 4 5 is displayed

Press **Prog.** key to enter

Event 3 (OFF at 7:00PM Saturday)

Press ☝ key twice. OFF symbol ◯ appears

Press **h** key to 07PM

Press **m** key once to 00

Press **Day** key 9 times until only 6 is displayed

Press **Prog.** key to enter

Press ◷ key to enter Run Mode

IF AN "ON" TIME WAS PROGRAMMED THAT IS EARLIER IN THE DAY THAN THE CURRENT TIME, PRESS ONCE TO TURN THE TIMER "ON". (IT DOES NOT "LOOK BACK" TO DETERMINE IF IT SHOULD BE ON OR OFF AFTER PROGRAMMING).

IF 24 HOUR TIME CONTROL (SAME SCHEDULE EVERY DAY OF THE WEEK) IS DESIRED, IGNORE **Day** KEY.

If an ON or OFF symbol is not entered, the ON symbol will flash, and programme will not be accepted.

Event Review

To review the programs at any time, press **Prog.** key. Events will appear in the order they were entered with repeated presses of the **Prog.** key. After all events have been reviewed, the blank display will appear to allow entering another event. Another press of the **Prog.** key will display the number of free events available, such as **Fr 16** if 4 events have been entered.

Manual Override

While in the Run Mode, pressing the key once will reverse the current mode; ON to OFF or OFF to ON. The symbol appears in the display to indicate a temporary override.
At the next scheduled switching time, automatic control resumes, eliminating the override.

CONTINUOUS OPERATION: While in the Run Mode, press the key twice to turn the output to permanently ON. symbol appears in display.

Pressing the key three times will turn the output OFF permanently. symbol appears in display.

To terminate a continuous override, press the key until appears in the display.

Changing an Event

Select the event to be changed with the **Prog.** key. A new set of days may be selected with the **Day** key just as in initial programming.

Hours and minutes can be changed with the **h** and **m** keys.

Press **Prog.** or key to store the new programme.

Deleting an Event

To delete only one or a few events: Press **Prog.** key until the desired program is displayed.

Press **m** key to **:59** and press once more to blank out.

Press **h** key to **11PM** and press once more to blank out.

Press key, display will flash for several seconds and then enter the Run Mode. Using the reset key will delete ALL events, the time of day, and day of the week.

Troubleshooting

PROBLEM: Days are flashing, pressing any key does nothing except key turns output ON and OFF.

SOLUTION: **Time of Day** and **Day of Week** have not been set. See "SETTING THE TIME"

This is the condition after a reset. If the timer is found in this condition after it has been installed, programmed and operating for a while, it may indicate that interference has disrupted the microprocessor causing a loss of programme information.

A second, but very unlikely cause of loss of programme is a power failure with the backup capacitor low or dead. Check by disconnecting power and monitoring how long the capacitor keeps the time of day in the display. Typically, the capacitor will maintain the time and programmes for 4 days, but not more than 5 days.

PROBLEM: Time of day was set while holding the key down, but days are still flashing.

SOLUTION: Current day of week was not set **while holding down the key.** See "SETTING THE TIME"

PROBLEM: It is 10AM and an ON event for 8AM was entered, but the output is not ON. Display shows the and symbols.

SOLUTION: After programming, the timer does not "look back" to determine if it should be ON. Press the key (temporary override) to turn the output ON; appears in display. The timer will assume automatic operation at the next programmed event.

PROBLEM: An event for 8AM Monday through Friday was entered,

but it will not accept it and is flashing.

SOLUTION: The ON or OFF was not entered as part of the program. ON or OFF **must be selected.**

1 Technical Data

F24E

Heating

Heat input (max) NET Q	26,94 kW 91,200 BTU/H
Heat input (min) NET Q	9,91 kW 33,820 BTU/H
Heat output (max) NET P	23,6 kW 81,550 BTU/H
Heat output (min) NET P	8,9 kW 30,370 BTU/H
Efficiency - Sedbuk D	78,3%
Maximum heating temperature	87° C
Expansion vessel effective capacity	5 litres
Expansion vessel charge pressure	0,5 bar
Maximum system capacity at 75°C	110 litres
Safety valve,	maximum service pressure 3 bar

Hot water

Heat input (max) NET Q	26,94 kW 91,200 BTU/H
Heat input (min) NET Q	9,91 kW 33,820 BTU/H
Heat output (max) NET P	23,6 kW 81,550 BTU/H
Heat output (min) NET P	8,9 kW 30,370 BTU/H
Maximum hot water temperature	60 °C
Minimum hot water temperature	38 °C
Specific flow rate (for 35°C temp rise)	9,8 litres/min.
Threshold flow rate	1,7 litres/min.
Maximum supply pressure	10 bar
Minimum supply pressure	0,5 bar

Combustion

Products outlet diameter	60 mm
Fresh air inlet diameter	100 mm
Combustion products values	CO (60 ppm) CO2 (6,7%) NOx (48ppm)

Electrical

Electrical supply	230 V ~ 50Hz
Electrical rating	122 W fused at 3A
Level of protection	IPX4D
Fuse rating	125mA

Natural Gas (G20)

Ø Burner injector	1,2 mm
Inlet pressure	20 mbar
Maxi. Burner pressure	12,2 mbar
Mini. Burner pressure	2,25 mbar
Gas rate maximum	2,74 m³/h
Gas rate minimum	1,16 m³/h

Butane Gas (G30)

Ø Burner injector	0,73 mm
Inlet pressure	29 mbar
Maxi. Burner pressure	23,2 mbar
Mini. Burner pressure	4,41 mbar
Gas rate maximum	2,01 kg/h
Gas rate minimum	0,87 kg/h

Propane Gas (G31)

Ø Burner injector	0,73 mm
Inlet pressure	37 mbar
Maxi. Burner pressure	29,8 mbar
Mini. Burner pressure	5,4 mbar
Gas rate maximum	2,01 kg/h
Gas rate minimum	0,83 kg/h

F18E SB

Heating

Heat input (max) NET Q	21,9 kW 74,722 BTU/H
Heat input (min) NET Q	11 kW 37,532 BTU/H
Heat output (max) GROSS P	19,8 kW 67,556 BTU/H
Heat output (min) GROSS P	9,2 kW 31389 BTU/H
Efficiency - Sedbuk D	78,8%
Maximum heating temperature	87° C
Expansion vessel effective capacity	5 litres
Expansion vessel charge pressure	0,5 bar
Maximum system capacity at 75°C	110 litres
Safety valve,	maximum service pressure 3 bar

Combustion

Products outlet diameter	60 mm
Fresh air inlet diameter	100 mm
Combustion products values	CO (30 ppm) CO2 (5,9%) NOx (76 ppm)

Electrical

Electrical supply	230 V ~ 50Hz
Electrical rating	122 W fused at 3A
Level of protection	IPX4D
Fuse rating	1,25mA

Natural Gas (G20)

Ø Burner injector	1,2 mm
Inlet pressure	20 mbar
Maxi. Burner pressure	8,82 mbar
Mini. Burner pressure	2,25 mbar
Gas rate maximum	2,3 m³/h

Butane Gas (G30)

Ø Burner injector	0,73 mm
Inlet pressure	29 mbar
Maxi. Burner pressure	17,65 mbar
Mini. Burner pressure	4,41 mbar
Gas rate maximum	1,72 kg/h
Gas rate minimum	0,87 kg/h

Propane Gas (G31)

Ø Burner injector	0,73 mm
Inlet pressure	37 mbar
Maxi. Burner pressure	22,52mbar
Mini. Burner pressure	5,4 mbar
Gas rate maximum	1,70 kg/h
Gas rate minimum	0,83 kg/h

1 Technical Data

The **F24E and F18E SB** are delivered in two separate packages:
• The boiler including hanging bracket complete with isolating valves and fittings.
• The flue system.

Net lift weight (boiler only)

F24E	**34 kg**
F18E SB	**32 kg**

Gross lift weight (boiler, hanging bracket isolation valves and packaging)

F24E	**35 kg**
F18E SB	**33 kg**

Diagram 1.1

2 General Information

IMPORTANT NOTICE.

Where no British Standards exists, materials and equipment should be fit for their purpose and of suitable quality and workmanship.

Refer to Manual Handling Operations, 1992 regulations.

The installation of this boiler must be carried out by a competent person in accordance with the rules in force in the countries of destination.

Manufacturer's instructions must not be taken as overriding statutory requirements.

2.1 Sheet Metal Parts

WARNING: When installing the appliance, care should be taken to avoid any possibility of personal injury when handling sheet metal parts.

2.2 Statutory Requirements

The appliance is suitable only for installation in GB and IE and should be installed in accordance with the rules in force.

In GB the installation of the boiler MUST be carried out by a competent person as discribed in the following regulations:

Manufacturer's instructions, supplied.

The Gas Safety (Installation and Use) Regulations.

The appropriate Building Regulations, either The Building Regulations, The Building Regulations (Scotland), The building Regulations (Nothern Ireland).

The Water Fittings Regulations or Water Bylaws in Scotland. The Health and Safety at Work Act, Control of Substances Hazardous to Health (COSHH).

The Current I.E.E. Wiring Regulations.

Where no specific instructions are given, reference should be made to the relevant British Standard Code of Practice.

In I.E the installation must be carried out by a competent person and installed in accordance with the current edition of I.S. 813

"Domestic Gas Installations", the current Building Regulations and reference should be made to the current ETCI rules for electrical installation.

In GB the following Codes of Practice apply:

BS4814, BS5440 Part 1 and 2, BS5449, BS5546 Part 1, BS6700, BS6798, BS6891 and BS7074 Part 1 and 2, BS7478, BS7593, BS7671.

In IE: I.S.813, BS5546, BS5449, BS7074, BS7593.

Manufacturer's notes must not be taken as overriding statutory requirements.

BSI Certification

This boiler certificated to the current issue of EN 483 for performance and safety.

It is important that no alteration is made to the boiler, without permission, in writing, from Hepworth Heating Ltd.

Any alteration that is not approved by Hepworth Heating Ltd., could invalidate the warranty and could also infringe the current issue of the Statutory Requirements.

2 General Information

2.3 Gas Supply

The gas installation must be in accordance with the relevant standards.

In GB this is BS 6891.

In IE this is the current edition of I.S.813 "Domestic gas installation".

The supply from the governed meter must be of adequate size to provide a steady inlet working pressure of 20mbar (8in wg) at the boiler.

Important Notice

If your boiler has been converted to use L.P.G. Propane the following note applies:

Propane cylinders are under pressure and should never be stored or used indoors residentially.

They should only be kept outside.

Under no circumstances should L.P.G. Propane cylinders be fitted or stored in basement areas or boiler houses.

On completion, test the gas installation for soundness using the pressure drop method and suitable leak detection fluid, purge in accordance with the above standard.

3 Heating System Design

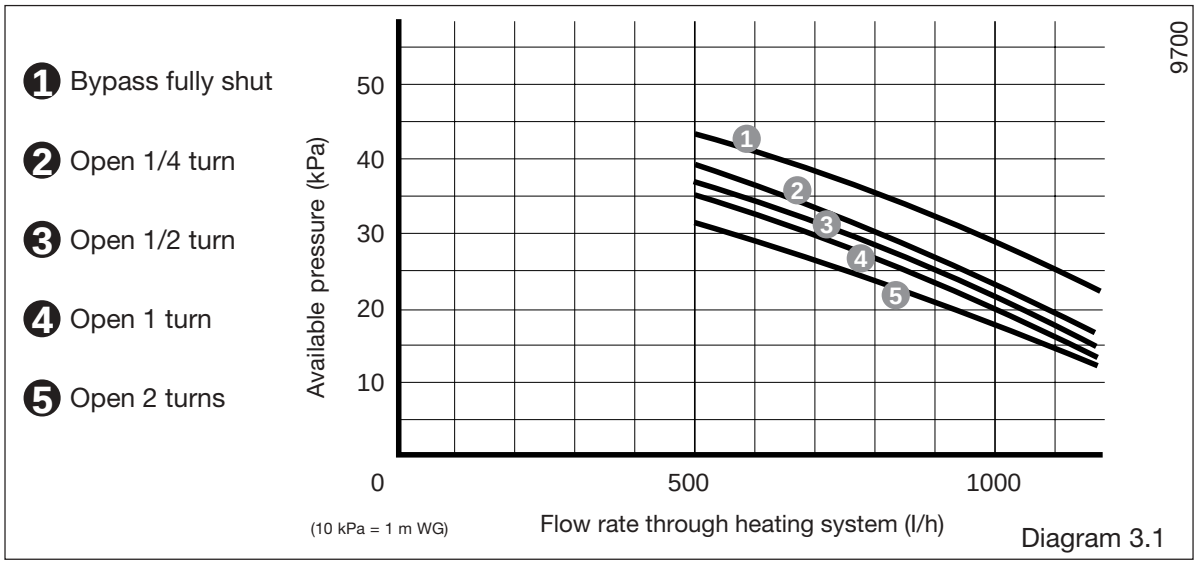

Diagram 3.1

The installation of the boiler must comply with the requirements of the current issue of BS6798, in Ireland, refer also to the current edition of I.S.813"Domestic Gas Installations".

In GB it is necessary to comply with the Water Supply (Water Fittings) Regulations 1999 (for Scotland, the Water Byelaws 2000, Scotland).

To comply with the Water Regulations your attention is drawn to: The Water Regulations guide published by the Water Regulation Advisory Service (WRAS) which gives full details of the requirements.

In IE the requirements given in the current edition of I.S.813 "Domestic Gas Installations" and the current Building Regulations must be followed.

• The **F24E** and **F18E SB** are for use with sealed central heating systems.

• Heating surfaces may consist of radiators, convectors or fan assisted convectors.

• The safety valve is an integral part of the boiler and it cannot be adjusted.

• The circulation pump is integral with the boiler.

• Pipe sectional areas shall be determined in accordance with normal practices, using the output/pressure curve **(diagram 3.1).** The distribution system shall be calculated in accordance with the output requirements of the actual system, not the maximum output of the boiler. However, provision shall be made to ensure sufficient flow so that the temperature difference between the flow and return pipes be less than or equal to 20°C. The minimum flow rate is shown in table 1.

• The system can be fitted with a lockable control valve if necessary in the main flow or return pipes shown as **valve 'A' in diagram 3.2.**

• The piping system shall be routed so as to avoid any air pockets and facilitate permanent venting of the installation. Bleed fittings must be provided at every high point of the system and on all radiators.

• The total volume of water permitted for the heating system depends, amongst other things, on the static head in the cold condition. The expansion vessel on the boiler is pressurised at 0.5 bar and allows a maximum system volume of 110 litres for an average temperature of 75°C and a maximum service pressure of 3 bar. This pressure setting can be modified at commissioning stage if the static head differs. An additional expansion vessel can be fitted to the system if required, **see diagram 3.2.**

Guidance on vessel sizing is also given in a current issue of a BS5449 and BS7074 Part 1, for IE refer to the current edition of I.S.813 "Domestic Gas Installations".

• Provision shall be made for a drain valve at the lowest point of the system.

• Where thermostatic radiator valves are fitted, not all radiators must be fitted with this type of valve, and in particular, where a room thermostat is installed.

• In the case of an existing installation, it is **ESSENTIAL** that the system is thoroughly flushed prior to installing the new boiler, using a proprietary product from Fernox or Sentinel.

3.1 Bypass

• The boiler is fitted with an adjustable automatic bypass. Ensure that under no circumstances does the flow rate drop below the figure specified, **see table 1.**

• A system bypass is not required on the central heating circuit unless the system controls will not ensure aminimum water flow rate.

• Where a bypass has to be fitted, the bypass must be placed at least 1.5 metres away from the appliance, **see diagram 3.2.**

3.2 Filling the system F24E.

• An integral filling device is fitted to the boiler to initially fill the system and replace water lost during servicing, **see the relevant parts of diagram 2 controls and lighting and diagram 1.**

3.3 Filling the system F18E SB.

• Provision for filling the system must be made. The methods are shown in **diagram 3.3.** There must be no permanent connection to the mains water supply, even through a non-return valve.

NOTE: It is important that fittings used for connection to potable water comply with the water undertakings requirements.

TABLE 1. FLOW RATE	
Model	**Minimum flow rate**
F24E	16.94 litres per minute
F18E SB	13.21 litres per minute
This is equal to 20°C differential at maximum heat input.	

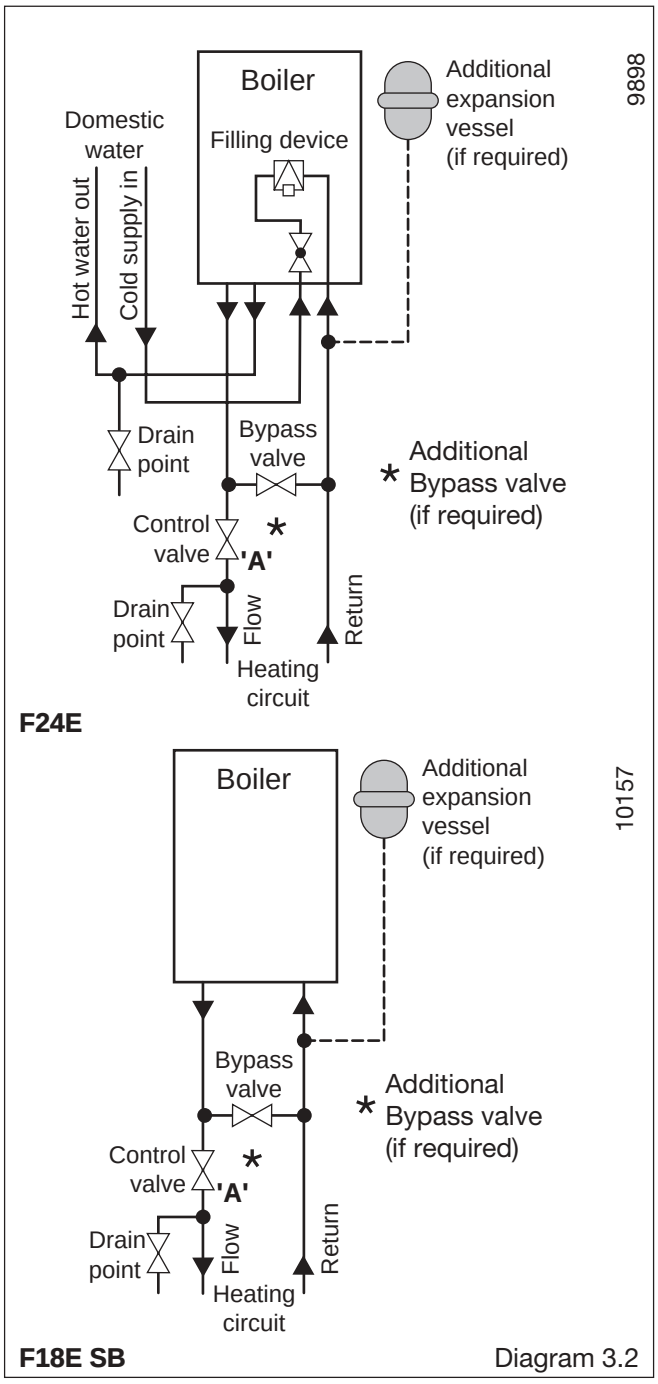

Diagram 3.2

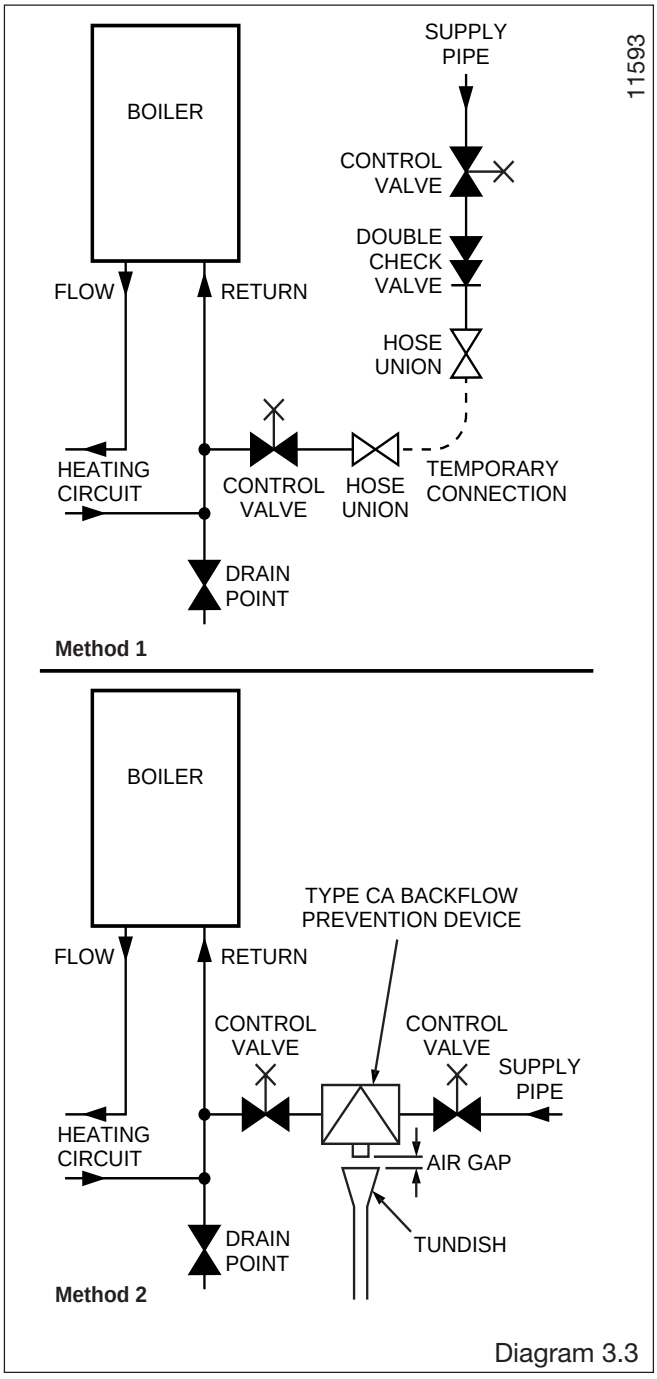

Diagram 3.3

4 Domestic Hot Water System Design. F24E Only

General - All domestic hot water circuits, connections, fittings must be in accordance with the relevant standards and water supply regulations.

For GB: Guidance G17 to G24 and recommendation R17 to R24 of the Water Regulation Guide.

For IE: The current edition of I.S.813 "Domestic Gas Installations".

• Copper tubing or plastic Hep_20 may be used for the domestic hot water system. Unnecessary pressure losses should be avoided.

• Provision shall be made for a drain valve at the lowest points of the system.

• The flow restrictor, supplied in the document envelope, must be fitted as diagram 7.1, limiting the flow through the boiler to a maximum of 10 litres/min.

• The boiler will operate with a minimum supply pressure of 0.5 bar, at a reduced flow rate.

Best operating performance will be obtained from a supply pressure of 1 bar or greater.

4.1 Hard Water Areas

In areas where the water is 'hard', more than 200mg/litre, it is recommended that a proprietary scale reducer is fitted in the cold water supply to the boiler.

5 Boiler Schematic F24E

1 - Fan.
2 - Air pressure switch.
3 - Heat exchanger.
4 - Overheat thermostat.
5 - Combustion chamber.
6 - Expansion vessel.
7 - Flame sense electrode.
8 - Burner.
9 - Ignition electrode.
10 - Pump.
11 - Heating thermistor.
12 - Ignition unit.
13 - By-pass.
14 - Gas control valve.
15 - Loss of water sensor.
16 - Domestic heat exchanger
17 - 3 way valve
18 - Domestic water flow sensor
19 - Filter cold water inlet
20 - Filling system
21 - Discharge safety valve (3bar)
22 - Drain valve
23 - Heating filter

A - Heating return
B - Cold water inlet
C - Heating flow
D - Domestic hot water outlet
E - Gas

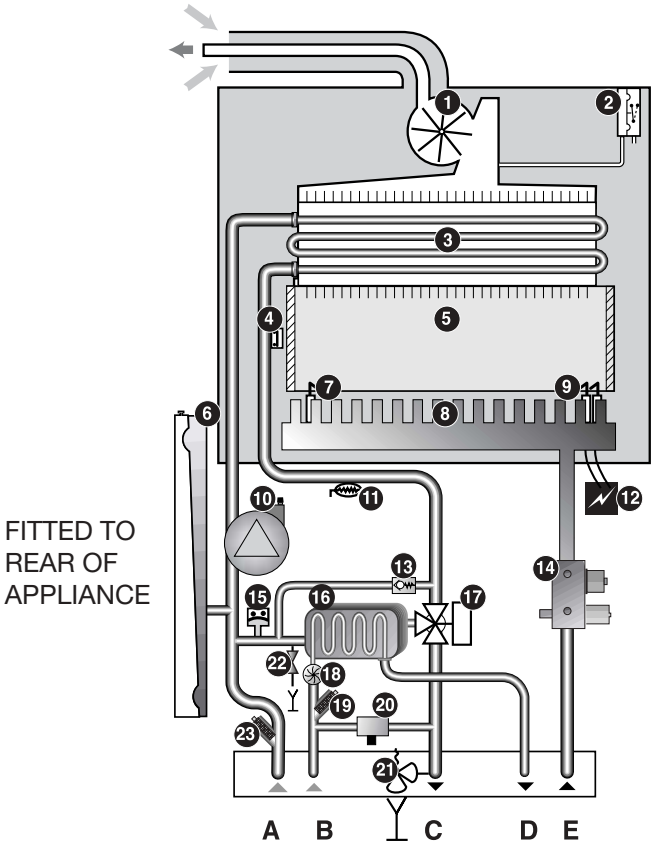

Diagram 5.1

5a Boiler Schematic F18E SB

1 - Fan.
2 - Air pressure switch.
3 - Heat exchanger.
4 - Overheat thermostat.
5 - Combustion chamber.
6 - Expansion vessel.
7 - Flame sense electrode.
8 - Burner.
9 - Ignition electrode.
10 - Pump.
11 - Heating thermistor.
12 - Ignition unit.
13 - By-pass.
14 - Gas control valve.
15 - Loss of water sensor.
16 - Heating filter.
17 - Discharge safety valve (3bar).

A - Heating return.
B - Heating flow.
C - Gas.

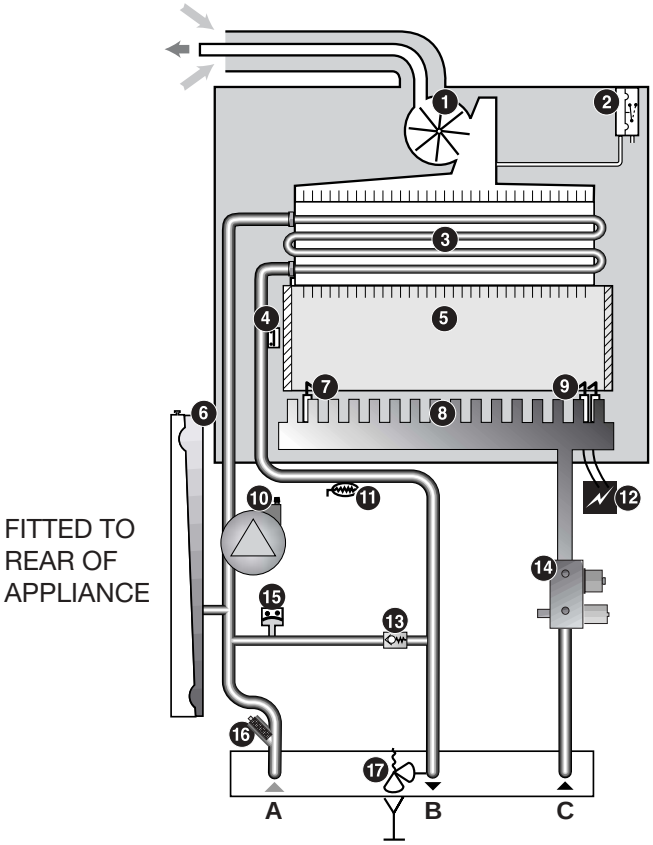

Diagram 5a.1

6 Boiler Location, Flue and Ventilation

6.1 Boiler Location

The recommended clearances are shown in **diagram 6.1.**

Note: The boiler must be mounted on a flat wall which is sufficiently robust to take its weight when full. If in doubt, expert advice should be obtained, in the event of the wall being found not suitable.

The minimum acceptable spacings from the terminal to obstructions, other terminals and ventilation openings are shown in **diagram 6.2.** For Ireland the minimum distances for the flue terminal positionning must be those detailed in I.S.813 "Domestic Gas Installations".

The boiler must be installed so that the terminal is exposed to the external air.

6.2 Terminal guard, see diagram 6.3.

A terminal guard is required if persons could come into contact with the terminal or the terminal could be subject to damage.

If a terminal guard is required, it must be positioned to provide a minimum of 50mm clearance from any part of the terminal and to be central over the terminal.

A suitable terminal guard type K3 can be supplied by:

Tower flue components Ltd.
Morley road
Tonbridge
Kent
TN9 1RA

6.3 Flue options

There are various flue systems to choose from as follows:

Horizontal telescopic top flue pack.

Horizontal top flue pack.

Vertical flue pack.

Twin flue pack.

Extensions, 90° and 45° bends.

For detailed information refer to flue options guide. This is available from your nearest stockist.

6.4 Cupboard or compartment ventilation

The boiler can be fitted in a cupboard or compartment without the need for permanent ventilation.

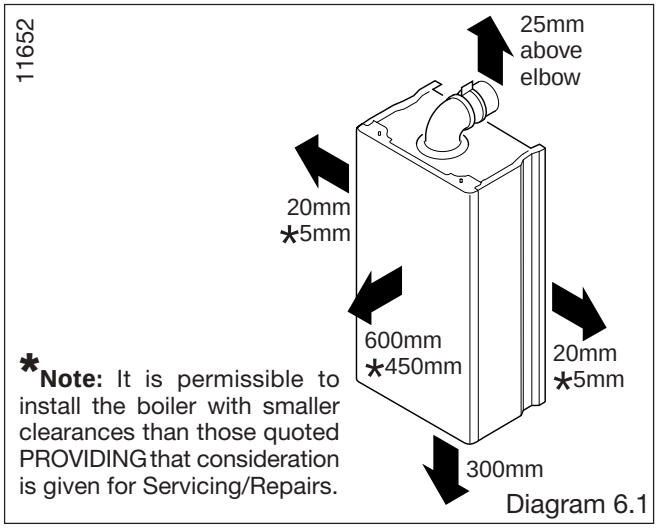

Diagram 6.1

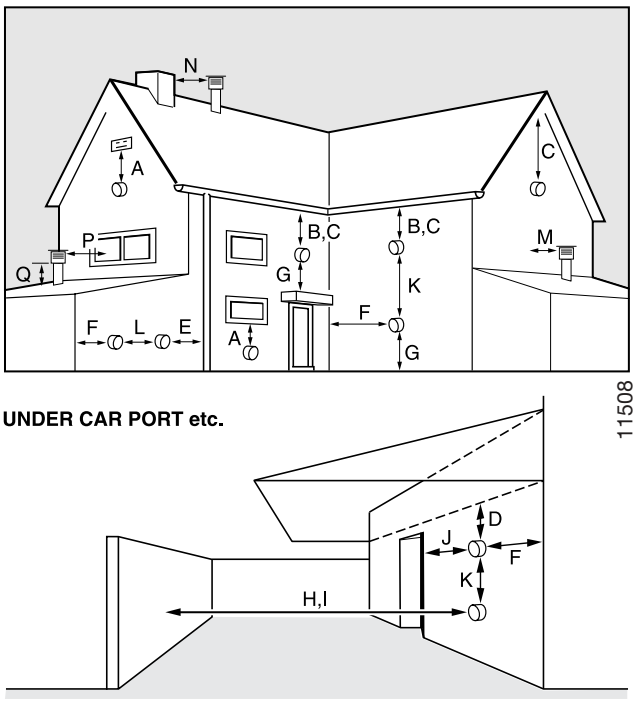

MINIMUM SITING DIMENSIONS FOR THE POSITIONING OF FLUE TERMINALS		MM
HORIZONTAL FLUES		
A	DIRECTLY BELOW, ABOVE OR HORIZONTALLY TO AN OPENING, AIR BRICK, OPENING WINDOWS, AIR VENT, OR ANY OTHER VENTILATION OPENING	300
B	BELOW GUTTER, DRAIN/SOIL PIPE	75
C	BELOW EAVES	200
D	BELOW A BALCONY OR CAR PORT	200
E	FROM VERTICAL DRAIN PIPES AND SOIL PIPES	150
F	FROM INTERNAL/EXTERNAL CORNERS OR TO A BOUNDARY ALONGSIDE THE TERMINAL	300
G	ABOVE ADJACENT GROUND OR BALCONY LEVEL	300
H	FROM SURFACE OR A BOUNDARY FACING THE TERMINAL	600
I	FACING TERMINALS	1200
J	FROM OPENING (DOOR/WINDOW) IN CAR PORT INTO DWELLING	1200
K	VERTICAL FROM A TERMINAL	1500
L	HORIZONTALLY FROM A TERMINAL	300
VERTICAL FLUES		
M	FROM ADJACENT WALL TO FLUE	300
N	FROM ANOTHER TERMINAL	600
P	FROM ADJACENT OPENING WINDOW	1000
Q	ABOVE ROOF LEVEL	300

Diagram 6.2

Diagram 6.3

7 Fixing Jig

The fixing jig is made up as follows:
A - Heating return fitting with isolating valve.
B (F24E Only) - Cold water inlet fitting with isolating valve (**m**). The cold water inlet restrictor supplied with boiler is fitted when the boiler is installed. Refer to Section 9.
C - Heating flow fitting with isolating valve.
D (F24E Only) - Domestic hot water outlet.
E - Gas service cock.

Other components within the fixing jig pack.
F - Hanging bracket
G - wall template
J - sealing washers and screws

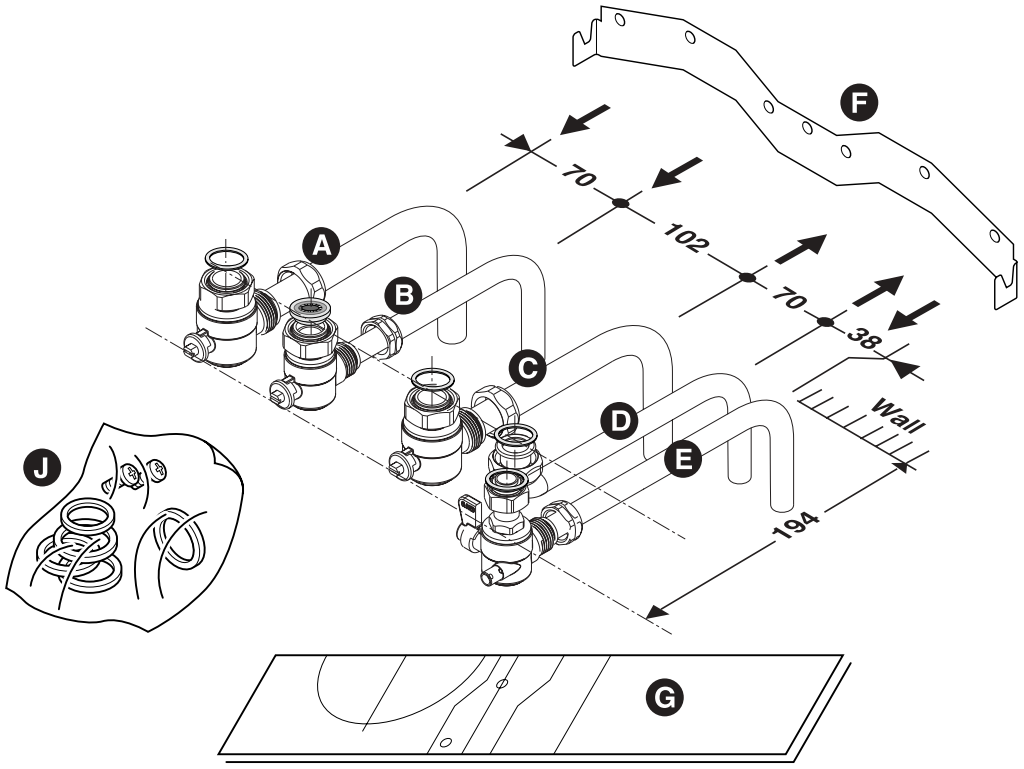

F24E shown

Diagram 7.1

8.1 Cutting the flue hole

• Remove the wall template, follow the instructions given on the wall template.

• Position the wall template, taking due regard of the minimum clearances for the selected flue application, **see diagram 8.1.**

• **Rear hole cutting**

• Mark correct position of Top Rear flue outlet hole from template, then remove template, before cutting, for use, later.

• **Side hole cutting**

• Mark the horizontal centre line for the hole on the rear wall. Extend the horizontal centre line to the side wall and mark the vertical centre line of flue hole as shown in **diagram 8.1**.

IMPORTANT NOTE: When cutting the flue hole and when extending the flue centre line to a side wall, remember that the flue system must have a fall of about 35mm per metre of flue downward towards the terminal. There MUST never be a downward incline towards the boiler.

• Making allowance for the slope of the flue, cut hole in external wall, preferably using a core drill. For installations with internal and external access use a 105mm diameter core drill.

• For installations with internal access only use a 125 mm diameter core drill.

8.2 Fixing jig, refer to diagram 7.1

• **IMPORTANT NOTE:** Ensure that the hanging bracket is fitted to a flat and true wall area for correct alignment with the boiler.

Side Flue - Check the horizontal centre line and reposition the template if necessary.

Rear Flue - Reposition the wall template over the hole in wall.

• Mark the securing position holes.

• Check that the hanging bracket is level.

• Drill, plug and secure the bracket to the wall, using suitable screws (not supplied) for the wall type and capable of supporting the total weight of the appliance (refer to wall template for fixing points).

8.3 Water connection

IMPORTANT NOTE: Do not subject the isolating valves to heat from blowlamp, when making connection.

Connect the system pipework to the fixing jig connection pipes and the fixing jig isolating valves, observing the correct flow and return as shown in **diagram 8.1.**

8.4 Gas connection

Gas Safety (Installation and use) Regulations

In your interests and that of gas safety, it is the law that ALL gas appliances are installed and serviced by a competent person in accordance with the above regulations.

• The whole of the gas installation, including the meter, should be inpected, tested for soundness and purged in accordance with the current issue of BS6891 and in IE the current edition of I.S.813 "Domestic Gas Installations".

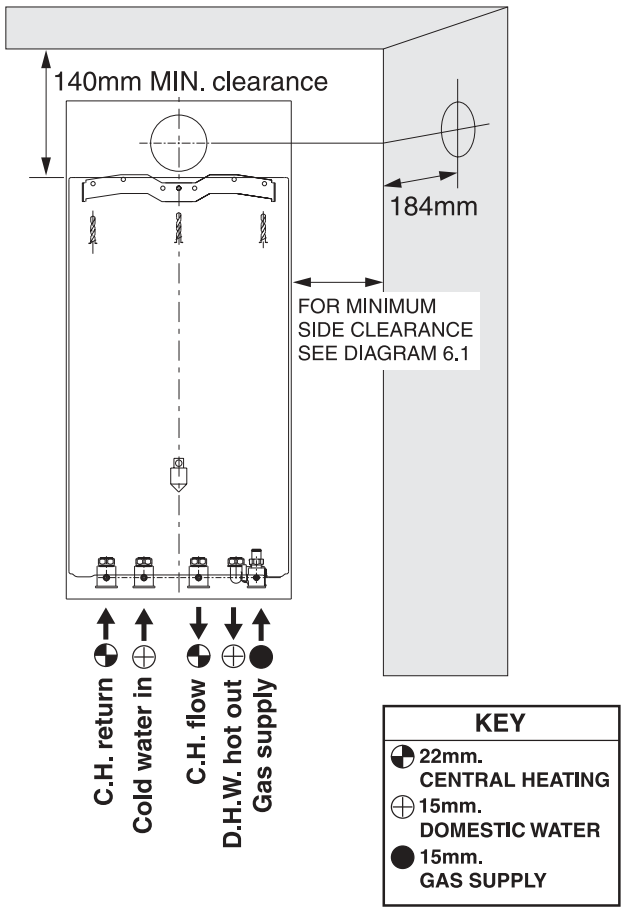

F24E shown

Diagram 8.1

9.1 Sheet metal parts

WARNING: When installing or servicing this boiler, care should be taken when handling the edges of sheet metal parts to avoid the possibility of personal injury.

9.2 Installing the boiler

IMPORTANT NOTE: The system must be thoroughly flushed using a propriety cleanser from Fernox or Sentinel to eliminate any foreign matter and contamination e.g. metal filings, solder particles, oil, grease etc.

Solvent products could cause damage to the system.

• Remove front panel, unscrew and remove the two retaining screws from the bottom of the front panel. Remove front panel by lifting up and forward.

• To remove the self adhesive wiring diagram label from the document envelope. Fit the self adhesive wiring diagram label to the inside of the front panel, put front panel in a safe place to avoid damaging it.

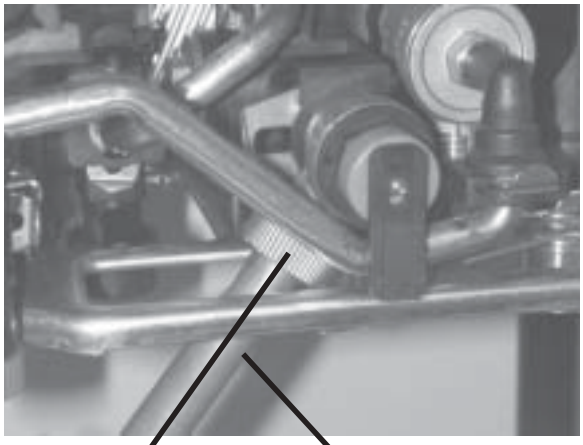

Diagram 9.1

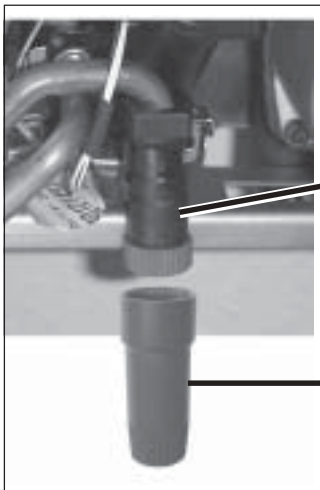

F24E Only Diagram 9.2

• If fitted ensure the plastic plugs are removed from water and gas pipes. NOTE: There will be some spillage of water.

• (F24E Only) Fit the cold water inlet restrictor (supplied in the document envelope) into cold water inlet isolating valve, **see diagram 7.1.**

Important Note. With regards to the manual handling operations, 1992 regulations, the following operation exceeds the recommended weight for one man lift.

• Lift the boiler up and engage boiler onto the hanging bracket, refer to diagram 7.1.

• Fit the boiler connection pipes and washers between the boiler and isolating valves, **see diagram 7.1.**

9.3 Discharge safety valve (diagram 9.1)

The discharge safety valve pipe and sealing washer supplied in the connections pack, when fitted to the safety valve, will extend the valve below the boiler. The discharge pipe must be extended using pipe not less than 15 mm o.d. to discharge in a visible position outside the building, facing downward preferably over a drain.

IMPORTANT NOTE: To facilitate servicing of the appliance, the discharge pipe MUST ONLY be extended using a compression fitting supplied.

The pipe must have a continuous fall and be routed to a position so that any discharge of water, possibly boiling or steam, cannot create any danger to persons, damage to property or external electrical components and wiring. Tighten all pipe connection joints.

9.4 Filling loop extension knob F24E Only

The filling loop extension knob is supplied in the discharge safety valve pipe connection pack. Fit to the filling device on/off knob, this is a push fit, **see diagram 9.2.**

9.5 Filling loop extension knob F18E SB

The filling loop extension is not required for this boiler, it can be discarded.

The *Horizontal Telescopic Top Flue,* Kit No. A2004500

Suitable for installations that require a flue length "L" from 430 minimum to 660 maximum. If longer flueing is required extensions and bends are available, see note below.

If the flue length, **see diagram 10.2.** is less than 430 'L' **Do Not** cut this flue but use the horizontal top flue 86285.

Note: Additional 1 metre extensions, 90° and 45° bends are available. The maximum extended flue is 3.5m. The use of flue bends requires the max extended flue lengths to be reduced by 1m. for 90° and 0.5m. for 45°.

10.1 Horizontal Telescopic Top Flue

Kit of parts, refer to diagram 10.1.

10.2 Horizontal telescopic flue system

Rear and side flue lengths and dimensions, see diagram 10.2.

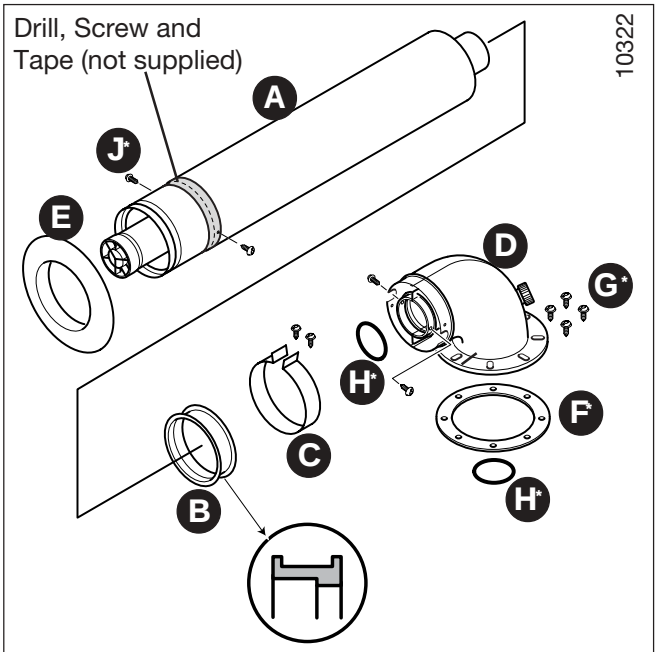

The flue kit A2004500 is 660 mm long and comprises:

- Telescopic flue assembly ..... A
- Fixing collar seal ..... B
- Fixing collar C
- Elbow ..... D
- External rubber sealing collar ..... E
- *Gasket ..... F
- *Screws 6 off ..... G
- *'O' rings ..... H
- *Screws 4 off ..... J

*** supplied in plastic bag**

Telescopic Top flue kit Diagram 10.1

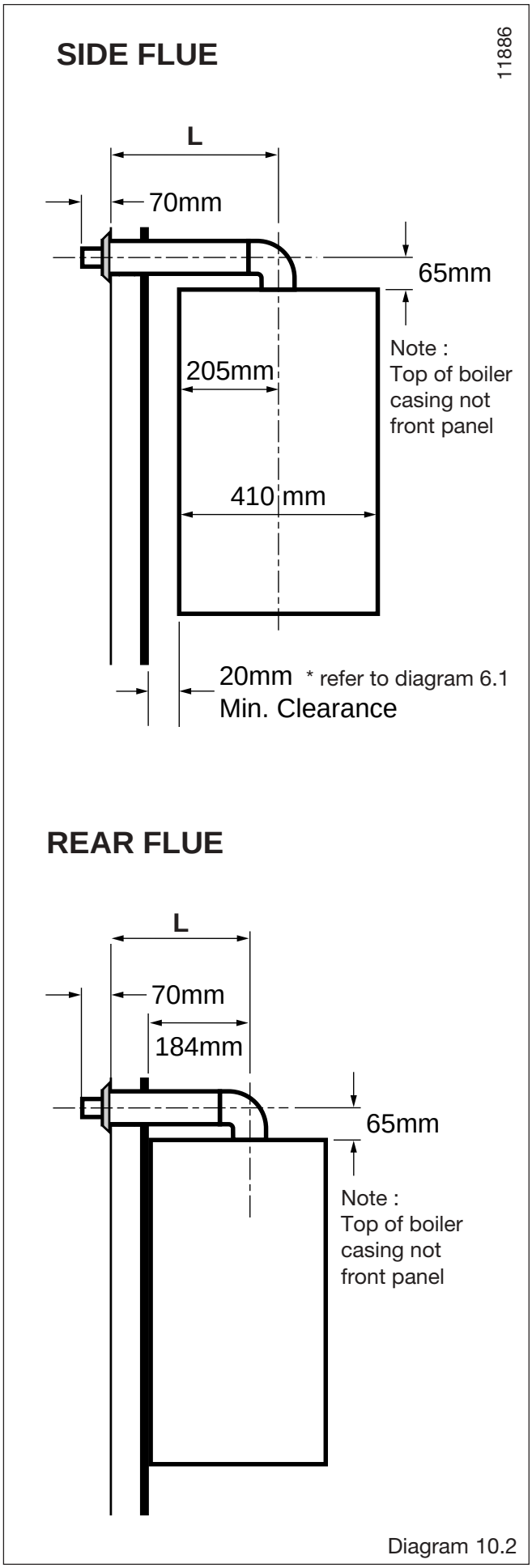

Diagram 10.2

10.3 Installation of telescopic flue assembly

• For flue lengths up to 0.5m fit the restrictor (supplied in the document envelope) inside the fan outlet, **see diagram 10.3.**

• Remove the elbow **(D)** and the telescopic flue assembly **(A)** from the flue kit.

• **Refer to Step 1. diagram 10.4.** Fit the telescopic flue assembly **(A)** into the prepared hole in the wall. Position the elbow **(D)** on the boiler, do not secure. Position the telescopic flue assembly **(A)** as it would be fitted.

• **Refer to Step 2. diagram 10.4.** Remove the telescopic flue assembly **(A)** from the prepared hole in the wall, make sure the air duct is extended to its required length. The flue duct at the elbow end must protrude 25mm. Drill ,secure with two screws and tape to secure the air duct, take care not to drill the inner flue pipe. Fit the fixing collar seal **(B)** to the telescopic flue assembly **(A)**.

• **Refer to Step 3. diagram 10.4.** Fit the telescopic flue assembly **(A)** with the fitted fixing collar seal into the prepared hole in the wall. Remove the backing from the self adhesive gasket **(F)** and carefully fit gasket to base of flue elbow. Fit the 'O' rings **(H)** into the grooves in the flue ducts within the elbow **(D)**. Lubricate the 'O' rings with silicone. Fit flue elbow **(D)** onto boiler and secure with the four screws **(G)**.

• **Refer to Step 4. diagram 10.4.** Fit rubber sealing collar **(E)**, into groove at the outer end of the air duct pipe **(A)**. Carefully pull flue duct pipe into the elbow **(D)**. (If the telescopic flue has been pulled apart care must be taken not to damage the 'O' ring on the flue duct when re-assembling). Secure with two screws **(G)**. Pull telescopic flue assembly **(A)** inwards to bring rubber sealing collar hard up against external wall.

• **Refer to Step 5. diagram 10.4.** Fit the fixing collar **(C)** using the two screws **(G)**.

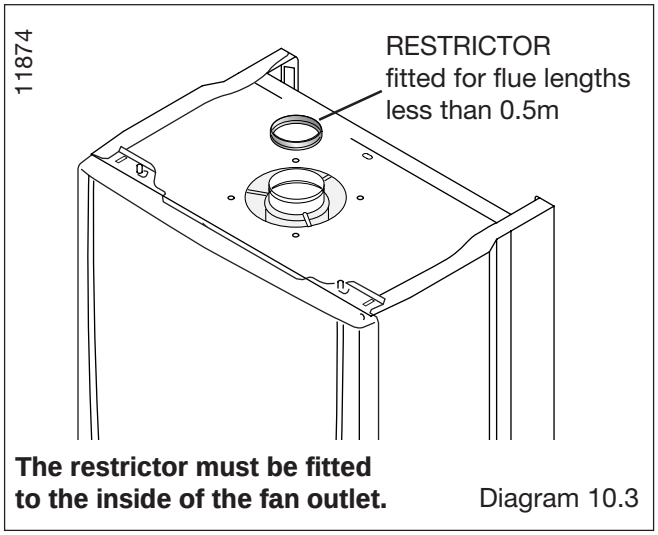

The restrictor must be fitted to the inside of the fan outlet. Diagram 10.3

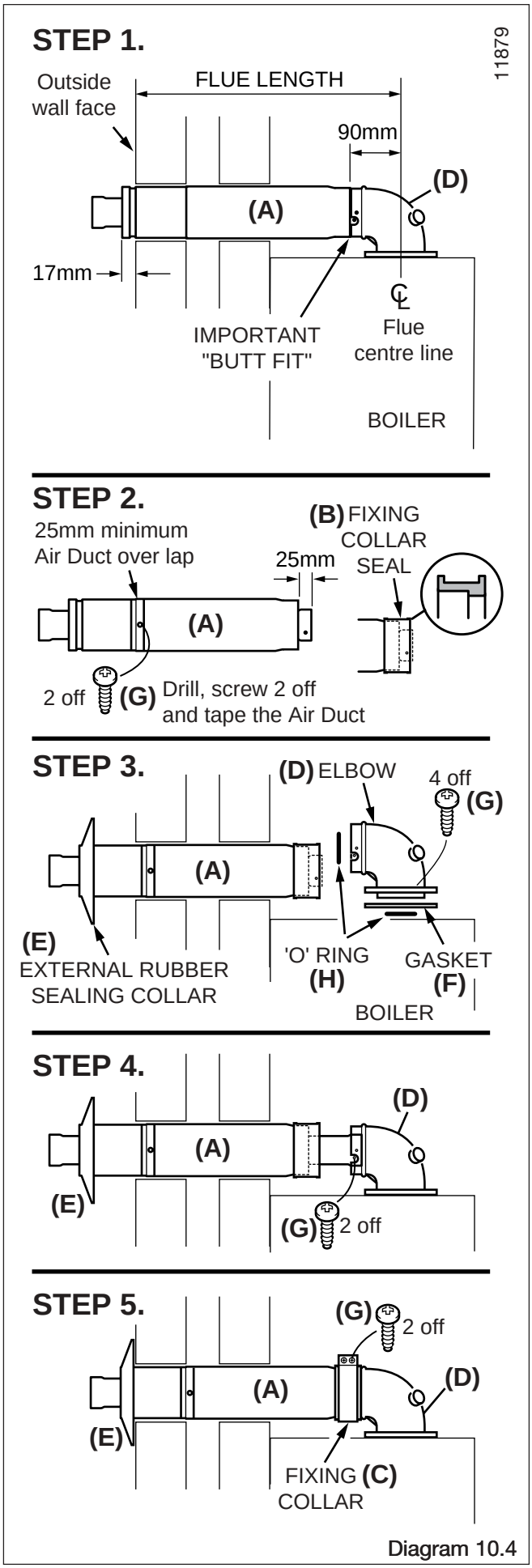

Diagram 10.4

10a.1 The *Horizontal Top flue* - kit 86285H

Is suitable for installations that require a max. flue length "L" of 740mm.

If a shorter flue length is required, the flue can be cut to a min. length "L" of 260mm rear or 300mm side. See diagram 10a.2 for min. flue lengths.

Note: Additional 1 metre extensions, 90° and 45° bends are available. The maximum extended flue is 3.5m. The use of flue bends requires the maximum extended flue lengths to be reduced by 1m. for 90° and 0.5m. for 45°.

10a.2 Flue systems rear and side, refer to diagram 10a.1.

10a.3 Flue cutting, refer to diagram 10a.2.

Important: Do not leave any burrs or sharp edges on the cut ends of the pipes.

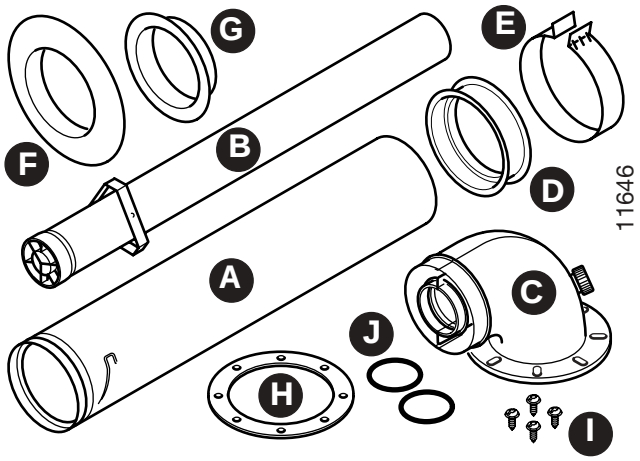

The flue kit 86285 comprises:
- Air duct pipe ..... A
- Flue duct pipe ..... B
- Elbow C
- Fixing collar seal ..... D
- Fixing collar ..... E
- External rubber sealing collar ..... F
- Internal flange ..... G
- Gasket ..... H
- Screws I
- 'O' rings ..... J

Horizontal Top flue kit Diagram 10a.1

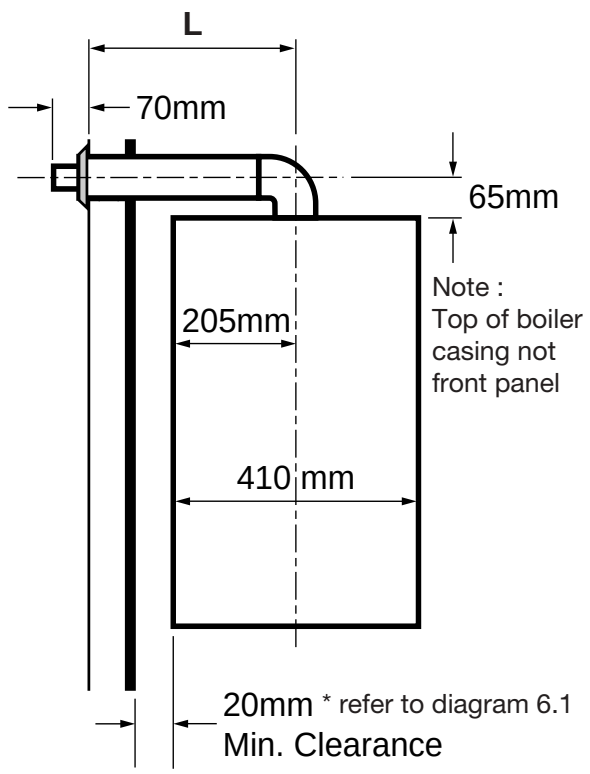

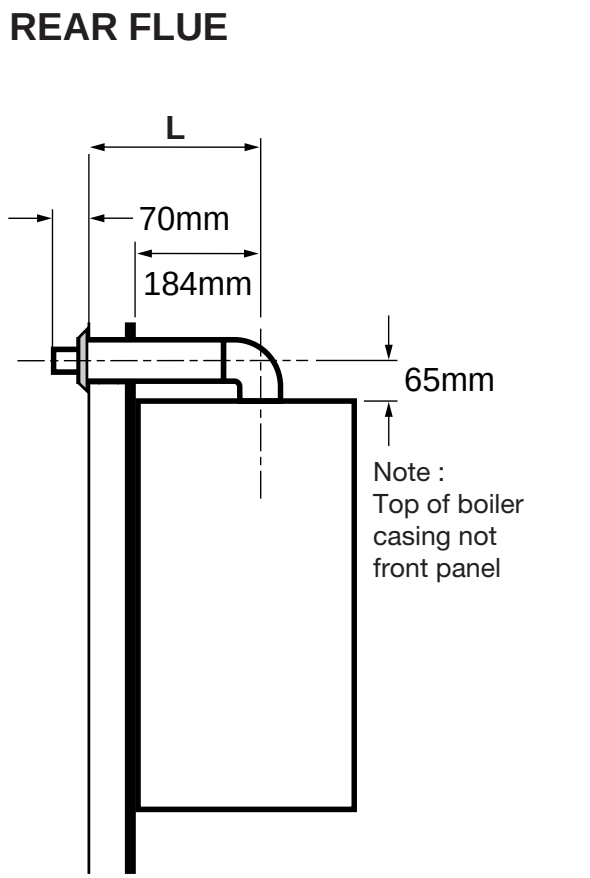

Diagram 10a.2

10a.4 Installation of horizontal top flue assembly

Important: If the flue has been cut, ensure that there are no burrs that could damage the 'O' ring.

• For flue systems less than 0,5 m long, fit the flue restrictor **(a)** into the fan outlet, see **diagram 10a.4.**

• Remove the backing from the self adhesive gasket **(H)** and carefully fit gasket to base of elbow **(C)**.

• Fit both 'O' rings **(J)** into the flue elbow **(C),** one at the inlet, one at the outlet. By necessity, they are a loose fit, apply a small amount of suitable lubricant to each 'O' ring when fitting.

• Fit rubber sealing collar **(F),** into groove at the outer end of pipe **(A).**

• Insert flue duct pipe **(B)** into inner end of air duct pipe **(A)**, rotate flue duct pipe to locate into groove inside air duct pipe.

• Fit air/flue duct pipe assembly through the wall with rubber sealing collar to the outside.

• Fit internal plastic flange **(G)** onto air duct pipe **(A)**.

• Fit the fixing collar seal **(D)** onto the flue duct pipe **(B)** ensuring it is the correct way round (the larger diameter onto the pipe).

• Pull air/flue duct pipe assembly inwards to bring rubber sealing collar **(F)** hard up against external wall.

• Fit elbow onto boiler and secure with the four screws **(I).** Carefully push the fixing collar seal onto the elbow ensuring that the flue duct pipe locates into the flue elbow outlet while taking care not to tear the 'O' ring.

• Fit the fixing collar **(E)** around the fixing collar seal **(D)** and secure with 2 screws provided.

• Push the internal plastic flange **(G)** along the air duct pipe **(A)** until engaged against internal wall.

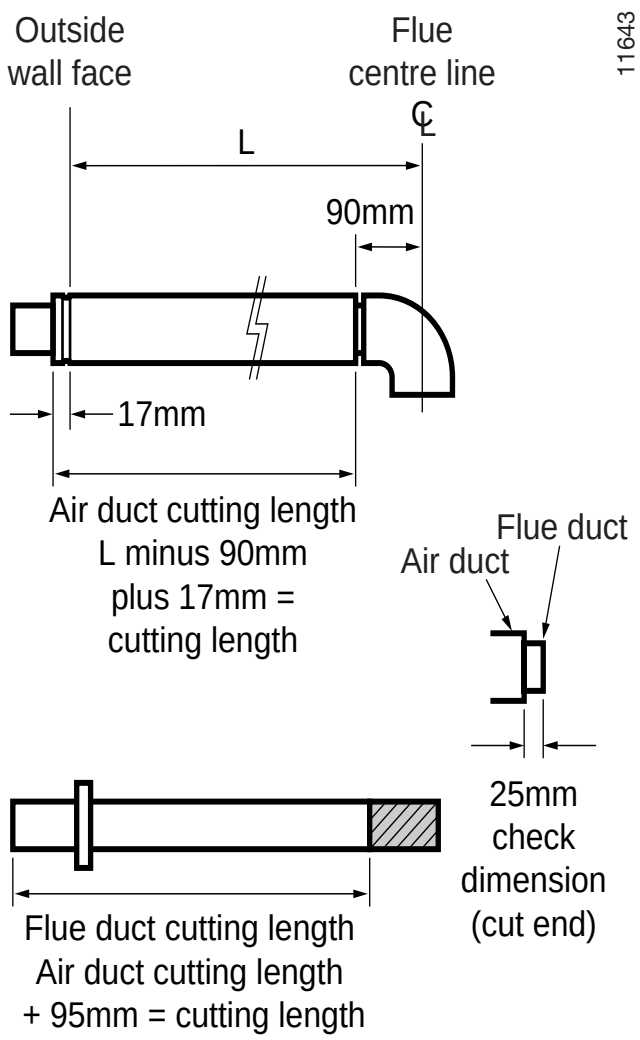

Diagram 10a.3

Horizontal Top flue system

The maximum permissible length (**L**) is 3.5 m. For flue systems up to 0.5 m length, the flue restrictor must be fitted (**a**) inside the fan outlet. For longer flue systems, the restrictor must not be fitted.

For each 90° flue elbow used, (or two 45° elbows) the maximum permissible length (**L**) must be reduced by 1 metre.

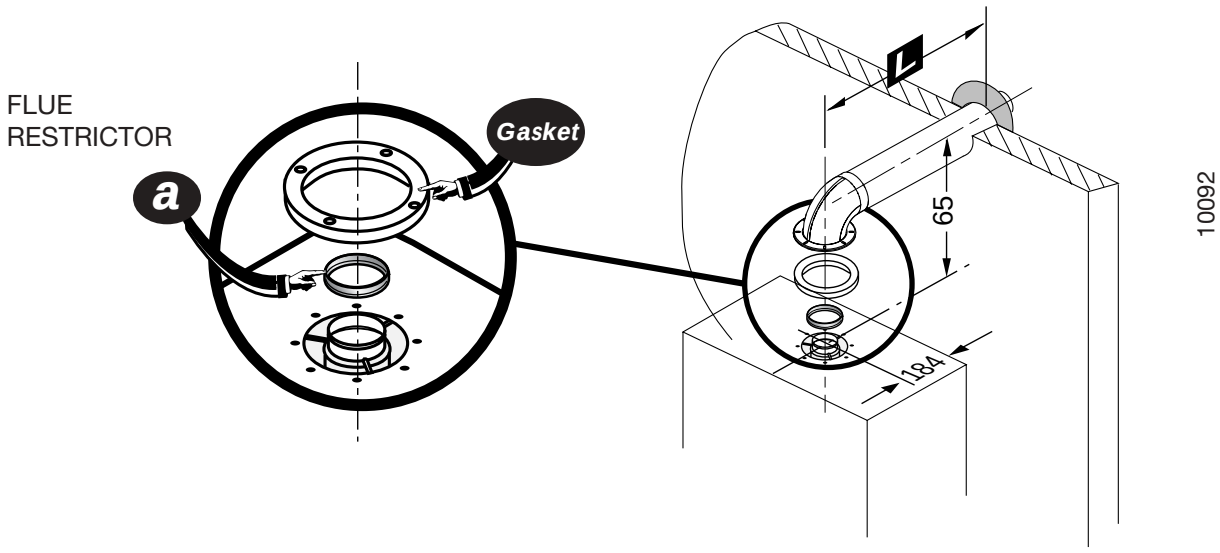

Diagram 10a.4

11 Electrical Connection

WARNING: This appliance must be earthed. This appliance must be wired in accordance with these instructions. Any fault arising from incorrect wiring cannot be put right under the terms of the Saunier Duval guarantee.

All system components must be of an approved type.

Electrical components have been tested to meet the equivalent requirements of the BEAB.

Do not interrupt the mains supply with a time switch or programmer.

Connection of the whole electrical system and any heating system controls to the electrical supply must be through a common isolator.

Isolation should preferably be by a double pole switched fused spur box having a minimum contact separation of 3mm on each pole. The fused spur box should be readily accessible and preferably adjacent to the boiler. It should be identified as to its use.

A fused three pin plug and shuttered socket outlet may be used instead of a fused spur box provided that:

a) They are not used in a room containing a fixed bath or shower.

b) Both the plug and socket comply with the current issue of BS1363.

11.1 Mains Cable

Important: If a replacement supply cable is required it must be purchased. Part No. S1008600.

11.2 Voltage Free External Controls

WARNING: UNDER NO CIRCUMSTANCES MUST ANY MAINS VOLTAGE BE APPLIED TO ANY OF THE TERMINALS ON THE VOLTAGE FREE HEATING CONTROLS CONNECTION TERMINAL.

This boiler will operate continuously on heating, as supplied, if the wire link (E), fitted between the two terminals of the heating controls connection, is left in place, **see diagram 11.1.**

External heating controls e.g. Room thermostat, should be fitted in accordance with the rules in force and as shown in the example, **diagram 11.2**.

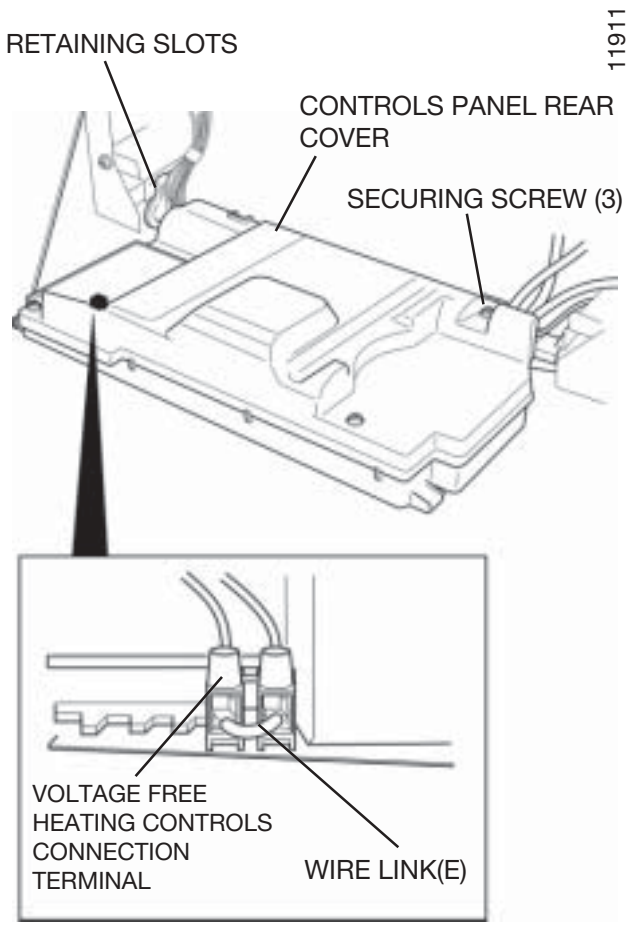

Diagram 11.1

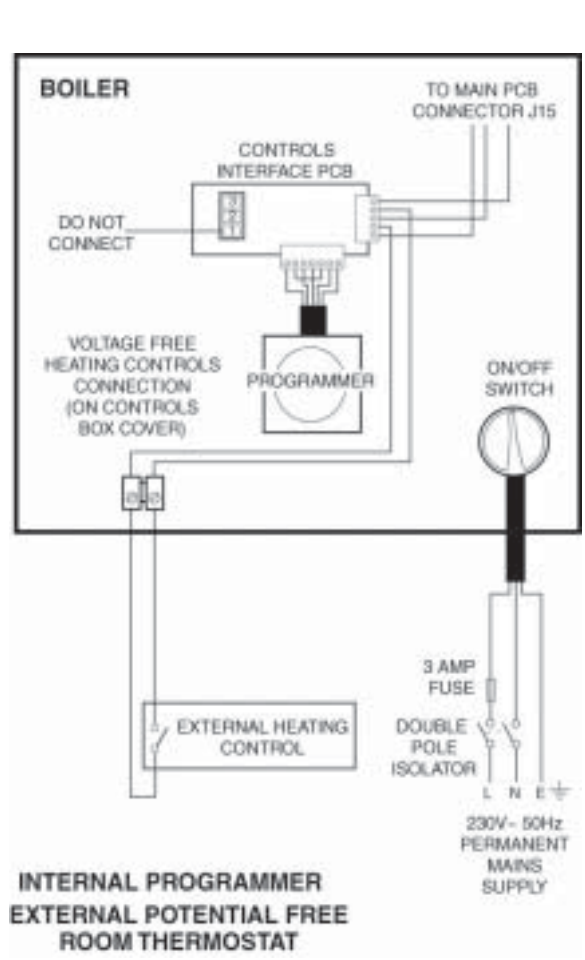

Diagram 11.2

11.3 Mains Voltage External Controls

WARNING: UNDER NO CIRCUMSTANCES MUST ANY MAINS VOLTAGE BE APPLIED TO ANY OF THE TERMINALS ON THE VOLTAGE FREE HEATING CONTROLS CONNECTION TERMINAL.

When mains voltage external controls are used, remove the MAINS VOLTAGE HEATING CONTROLS CONNECTION PLUG from the fittings pack and install on the control interface PCB as follows.

Gain access to the control interface by unclipping the fascia panel and hinging forward, see **diagram 11.3.**

Route the external heating controls cable (not supplied) and connect to the plug, see **diagram 11.3.**

Insert plug onto controls interface PCB, see **diagram 11.3.**

Close the fascia panel and remove the screws to open the rear cover of control panel, **see diagram 11.1.**

Secure the external heating control cable in the strain relief, and thread the cable through rear of the control panel and out of the cables exit, **see diagram 11.4.**

Close and secure rear cover of control panel.

IMPORTANT: Remove the wire link from the voltage free heating controls connector terminal, **see diagram 11.1.**

Connect external heating controls as **diagram 11.5.**

External controls should be fitted in accordance with the rules in force.

11.4 Electrical Connections - Testing

Carry out preliminary electrical system checks as below:

1. Test insulation resistance to earth of mains cables.
2. Test the earth continuity and short circuit of cables.
3. Test the polarity of the mains.

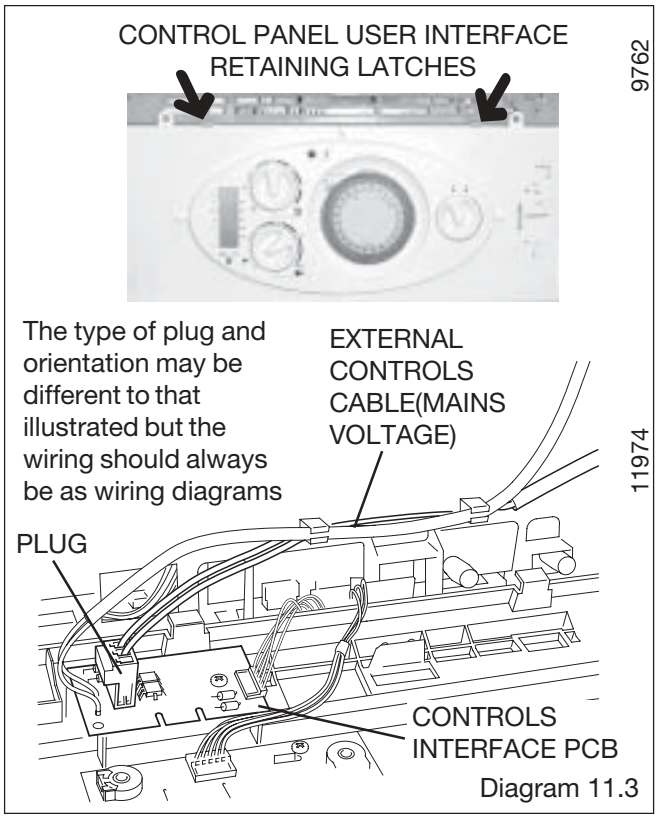

Diagram 11.3

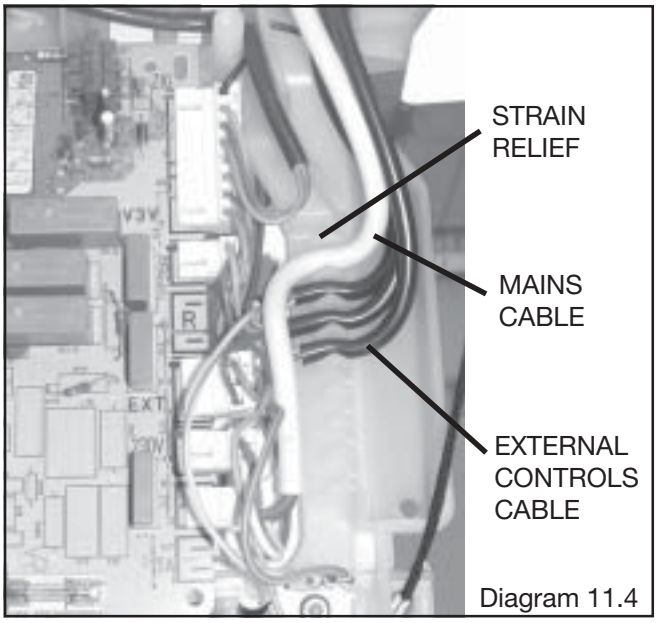

Diagram 11.4

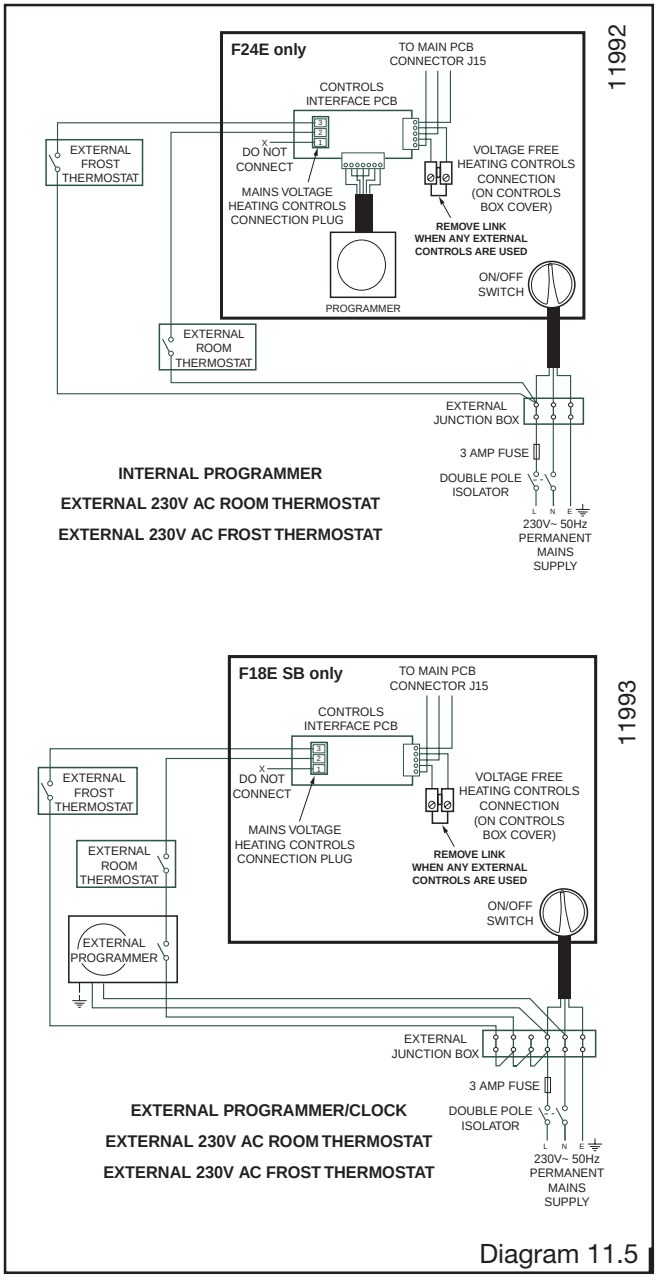

Diagram 11.5

12 Commissioning

Important: The commissioning and first firing of the boiler must only be done by a competant person.

Gas installation

If conversion from G20 to 30 or 31 is required, refer to section 13.

It is recommended that any air is purged from the supply at the gas purge point on the gas valve, see **diagram 12.1.**

Filling the system

The following steps 1 - 8, show how to fill the system.

1.

Make sure that:

- The boiler is connected to the electrical supply.
- The gas service cock is open.

Turn the switch OFF (**0**)

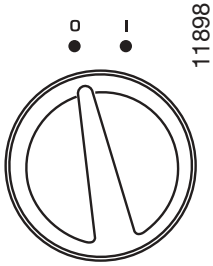

Air in pipes

Important: A central heating system can not operate correctly unless it is filled with water and air bled from the system. If these conditions are not met the system may be noisy.

Bleed the air in the radiators and adjust the pressure if system requires. If the system requires filling to often this may be due to minor leaks or corrosion in the system.

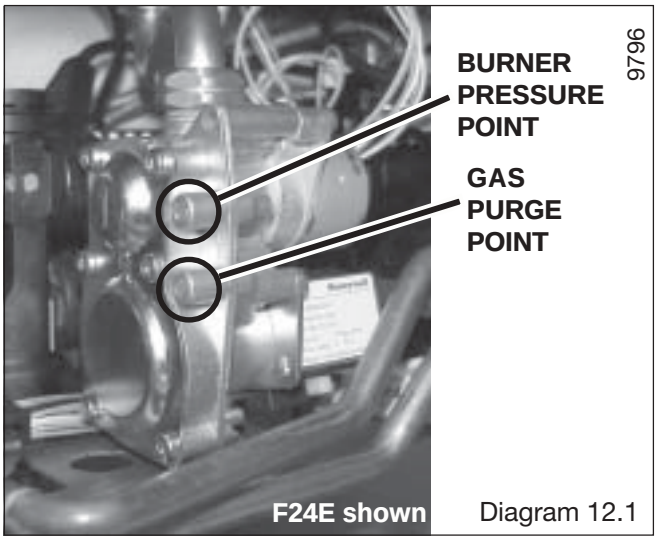

Diagram 12.1

2. • Open the three water isolating valves.

Note: Isolating valves are shown in the: OFF position

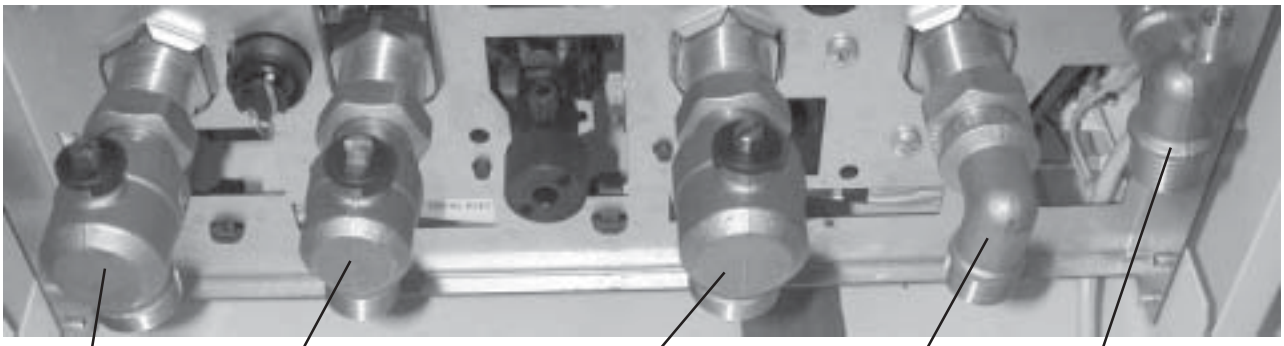

F24E shown

3. • Undo cap on automatic air vent on top of pump and leave undone.

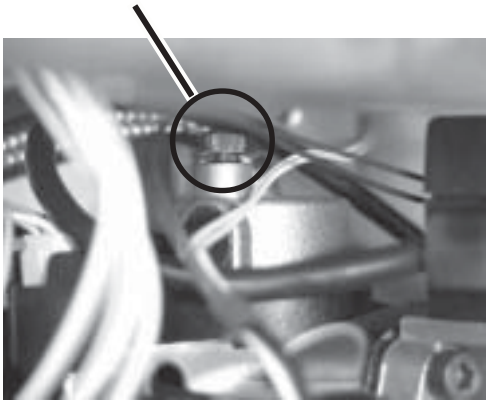

4. • Turn the switch ON (**I**)

- **F24E Only** Open the tap on the filling device
- Fill the system until the pressure indicated on the display is 1 bar. Close filling device.

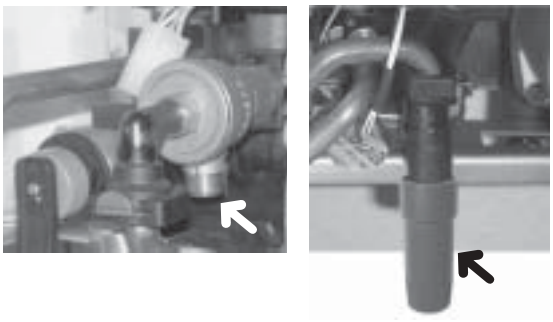

NOTE: On initial fill there may be a small discharge of water from the Reduced Pressure Zone valve

5. • Bleed each radiator to remove air, ensure all bleed screws are re-tightened.
• If necessary repressurise the system, refer to procedure 4

Ins 061a

6. • Leave cap open on automatic air vent.

9810

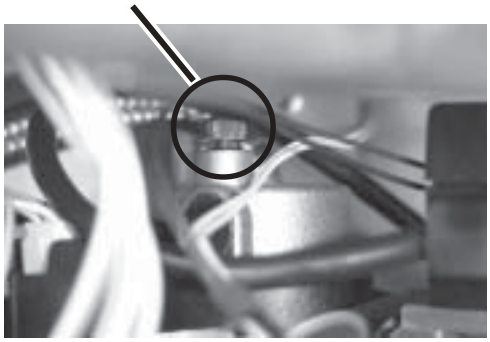

7. • Ensure the display indicates a system pressure of 1.0 bar adjust if necessary.

10217

8. • Open various hot water taps to bleed system

Ins 062a

Adjusting the Central heating output.

The central heating output is factory preset to approx. 15kW.

If a different central heating output is required, proceed as follows:

To gain access to potentiometer **P3**, unclip the control box, **see diagram 11.1.**

The potentiometer **P3**, is shown in **diagram 12.2,**to adjust to the required heating output, insert a small flat edge screw driver into the arrowed slot in potentiometer **P3**, turn clockwise to adjust to the desired setting. Use a manometer to monitor the burner pressure.

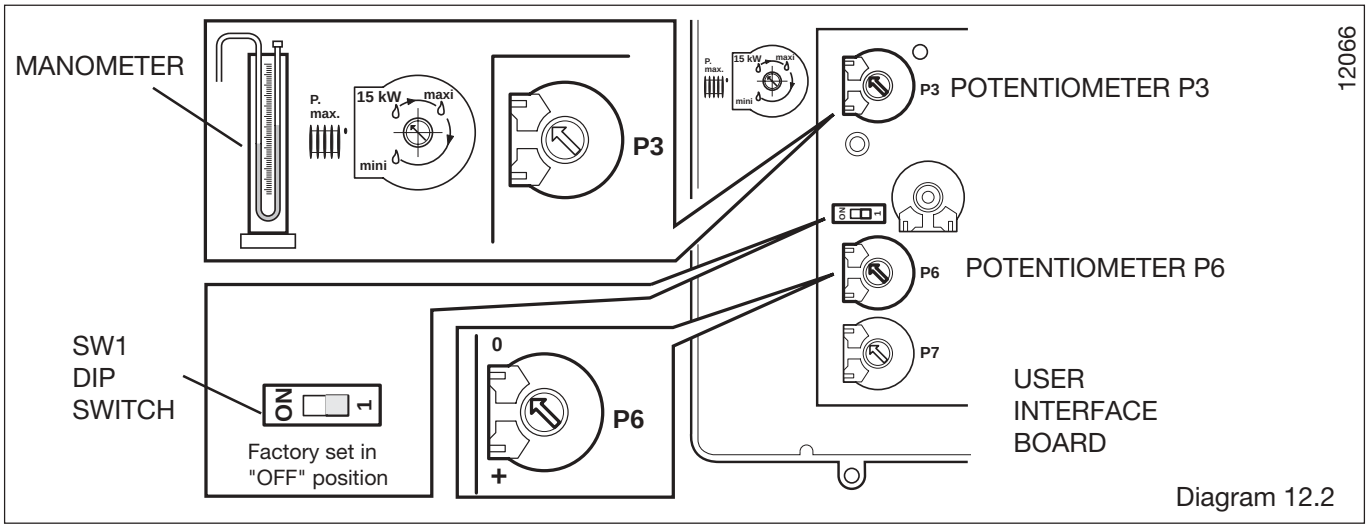

Diagram 12.2

Dip Switches

The position of the SW1Dip Switch(s), see diagram 12.2, and the table below can be used to change the operation of the pump and maximum heating temperature of your boiler.

PUMP OPERATION	DIP SWITCH 1
WITH BURNER	ON
WITH HEATING DEMAND	OFF*

FACTORY SETTING * GB/IE PREFFERED SETTING

12 Commissioning

When all adjustments are completed.

• Adjust heating temperature to maximum.

• Check that any external controls, if fitted, are calling for heat (set room thermostat to maximum).

• Allow the temperature to rise to the maximum value, with all radiator valves open. The temperature rise will cause release of the air contained in the water of the central heating system.

• Air driven towards the boiler will be automatically released through the automatic air vent.

• The air trapped at the highest point of the system must be released by bleeding the radiators. Check the burner gas rate required, ten minutes after lighting. Refer to Data Label on electrical controls box. Should there be any doubt about the gas rate it should be checked at the meter, refer to technical data.

On reaching maximum temperature, the boiler should be turned off and the system drained as rapidly as possible whilst still hot.

• Refill system to a pressure of between 1 and 2 bar and vent as before.

• Restart boiler and operate until a maximum temperature is reached. If necessary, refer to section 14 to adjust the bypass. Shut down boiler and vent heating system. If necessary, top up heating system and make sure that a pressure of at least 1 bar is indicated when system is COLD.

F24E Only Flush the domestic hot water system by opening the hot water taps for several minutes.

Completion

Adjust the boiler temperature control and any system controls to their required settings.

For IE, it is necessary to complete a "Declaration of Conformity" to indicate compliance to I.S.813. An example of this is given in the current edition of I.S.813.

Please ensure the "Benchmark" logbook is completed and left with the user and the magnetic lighting instruction label is placed on the surface of the boiler casing.

Instruct the User

Instruct and demonstrate the lighting procedure and advise the user on the safe and efficient operation of the boiler.

Instruct on and demonstrate the operation of any heating system controls.

Advise the user on the use and maintenance of any scale reducer and pass on any relevant instructional documents.

Advise that to ensure the continued efficient and safe operation of the boiler it is recommended that it is checked and serviced at regular intervals. The frequency of servicing will depend upon the installation conditions and usage, but in general, once a year should be enough.

Draw attention, if applicable, to the current issue of the Gas Safety (Installation and Use) Regulations, Section 35, which imposes a duty of care on all persons who let out any property containing a gas appliance in the UK.

It is the Law that any servicing is carried out by a competent person.

Advise the user of the precautions necessary to prevent damage to the system, boiler and the building, in the event of the heating system being out of use during frost or freezing conditions.

Advise the user that the permanent mains electrical supply SHOULD NOT be switched off, as the built in frost protection and pump saver program would not be operable.

Reminder, leave these instructions and the 'Benchmark' logbook with the user.

13 Changing Gas Type

Should it be necessary to change the gas type, a conversion kit with instructions will be required.

This modification must only be carried out by a competent person.

Conversion natural gas (G20) to G30/G31 Part No. A20027.

Setting the step pressure.

Adjusting the step pressure may be a necessary operation after gas conversion or after changing the gas control valve when a new replacement part is required.

Proceed as follows:

• Gain access to the gas control valve, connect a pressure gauge.

• Unclip the control box, **see diagram 11.1.**

• Run the appliance in heating mode.

• Read the burner pressure setting in heating mode, before the boiler modulates.

• Adjust the central heating output to the minimum setting by adjusting potentiometer **P3**, **refer to commissioning section.**

• Adjust the potentiometer **P6** burner pressure to the desired value, by inserting a small flat edge screw driver into the arrowed slot, turn to adjust to the desired setting, **see diagram 12.2.**

• Return the potentiometer **P3** to its initial value.

14 Bypass Setting

Bypass

The boiler has a built-in bypass, **refer to diagram 14.1.**

The boiler is supplied with the bypass open half a turn. It should not be necessary to adjust the bypass, but if required ensure that under no circumstances does the flow rate fall below the figures specified, **refer to table 1. in section 3** (turn clockwise 'A' to close the valve).

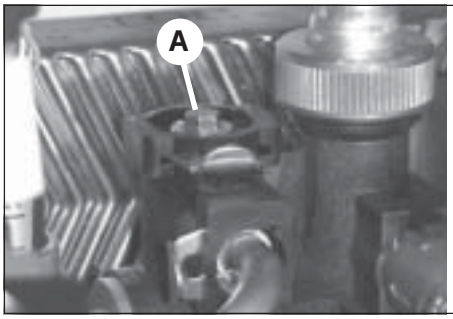

F24E shown 9718

Diagram 14.1

15 Routine Cleaning and Inspection

REMEMBER, when replacing a part on this appliance, use only spare parts that you can be assured conform to the safety and performance specification that we require. Do not use reconditioned or copy parts that have not been clearly authorised by Hepworth Heating.

To ensure the continued efficient and safe operation of the boiler it is recommended that it is checked and serviced at regular intervals. The frequency of servicing will depend upon the particular installation conditions and usage, but in general once a year should be enough.

It is the law that any servicing is carried out by a competant person.

15.1 Products of combustion check

Note: To obtain a products of combustion reading, unscrew the left hand sampling point cap on the flue elbow, located on top of boiler, **see diagram 15.1.**

Connect the analyser tube onto sampling point.

Refer to the combustion product values in **Section 1 Technical Data.**

Switch on the electrical supply and gas supply, then operate the boiler.

On completion of the test switch off the electrical supply and the gas supply, remove analyser tube and replace sampling point cap.

Diagram 15.1

15.2 Service Check and Preparation.

- Isolate boiler from the gas and electrical supplies.
- **(F24E Only)** Drain the Domestic hot water circuit, **refer to diagram 15.2.**
- Drain the boiler, **refer to diagram 15.2.**
- On completion check all gas-carrying parts for soundness with leak detection fluid.

To Drain the Domestic hot water circuit (F24E Only)

- Close boiler isolating valve **(b)**.
- Turn on one or more hot water taps.

To Drain the boiler

- Close isolating valves **(a) and (c).**
- Open the boiler drain valve **(f).**

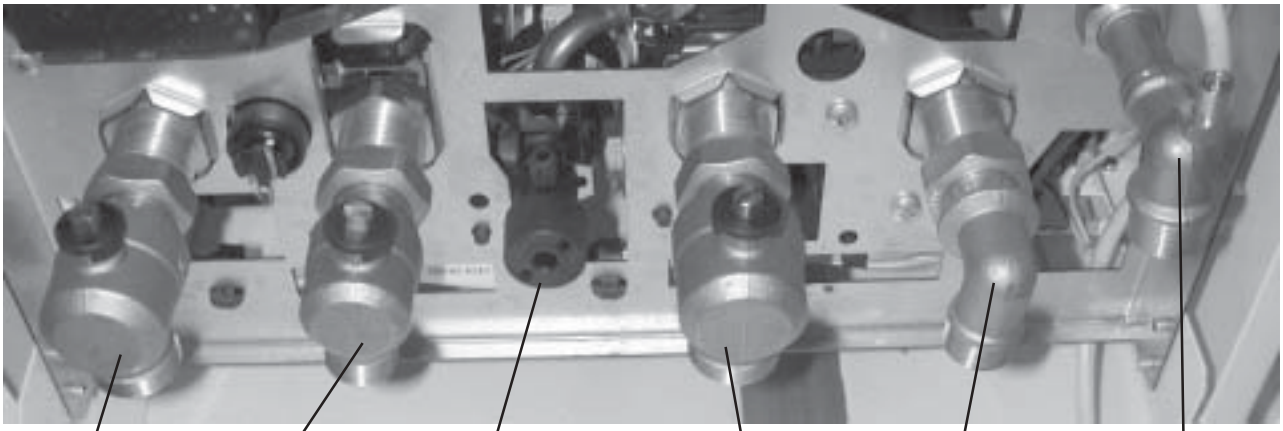

F24E shown

Note: Isolating cocks water and gas are shown in the: OFF position

Diagram 15.2

15.3 Front panel

• Unscrew and remove the two retaining screws from the bottom of the front panel.

• Remove front panel by lifting up and forward.

15.4 Control panel

• Lower forwards to gain access to lower part of boiler.

15.5 Sealed chamber cover

• Unscrew and remove the two retaining screws from the sealed chamber cover, **see diagram. 15.3**.

• Lift cover up and off pins on top of boiler.

15.6 Side panels (for ease of access if available), refer to diagram 15.4

• Unscrew and remove the two retaining screws from front of each side panel.

• Left hand side panel only disconnect the control panel retaining strap at the control panel.

• Unhook each panel from the front retaining tabs.

• Pull each panel forward from the rear retaining tabs to remove.

15.7 Combustion chamber cover

• Unscrew and remove the two screws securing combustion chamber cover to combustion chamber, **see diagram 15.5**.

• Remove combustion chamber cover from boiler.

15.8 Ignition and Flame Sensing Gaps

• Check that the ignition and flame sensing gaps as shown in **diagram 15.6.** Note: To gain access to ignition and sense electrodes for removal, refer to **Section, 18.11 and 18.12 in Replacement of Parts**.

15.9 Burner, refer to diagram 15.7

• Unscrew and remove the two burner retaining screws.

• Remove burner from boiler by easing it forward off the two burner guides, taking care not to damage the insulation.

• Clean burner by washing in soapy water. Dry thoroughly before refitting.

Note: To gain access to injectors for removal and cleaning, refer to **Section, 18.8.**

15.10 Fan, refer to diagram 15.8

• Disconnect power supply leads and earth lead from fan.

• Unscrew and remove the two fan retaining bolts.

• Ease the fan down and forwards to remove.

Diagram 15.3

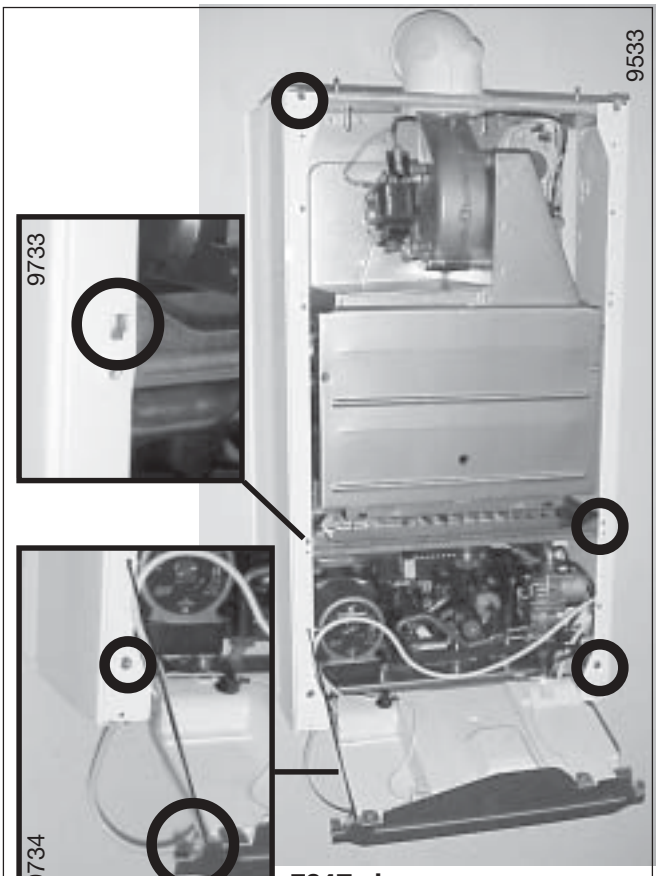

F24E shown

Diagram 15.4

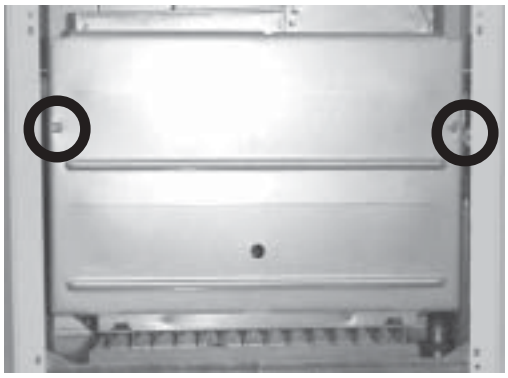

Diagram 15.5

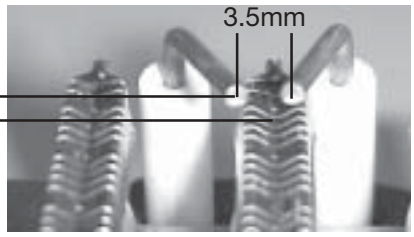

Diagram 15.6

15.11 Heat exchanger, refer to diagram 15.9

- Remove air pressure switch sensing tube from the side of the flue hood.
- Unscrew and remove the two retaining screws from front of each side panel.
- Unhook each panel from the front retaining tabs and ease outwards.
- Remove the flue hood. When refitting ensure the rear of the flue hood locates in the tabs.
- Use a soft brush or vacuum clean the heat exchanger.

DO NOT USE ANY TOOL LIKELY TO DAMAGE PAINTED FINISH OF HEAT EXCHANGER.

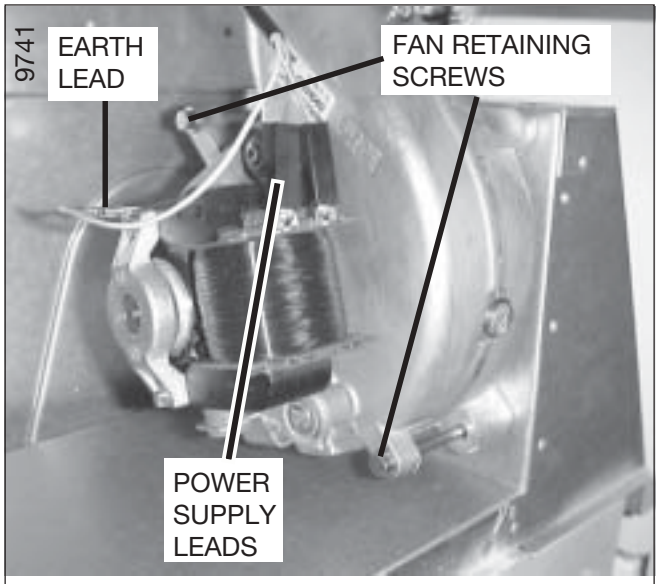

Diagram 15.8

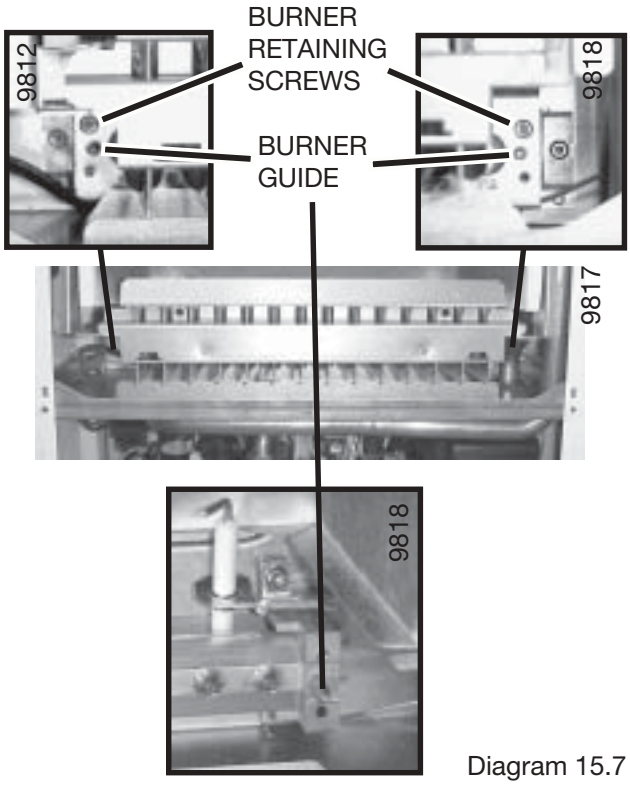

Diagram 15.7

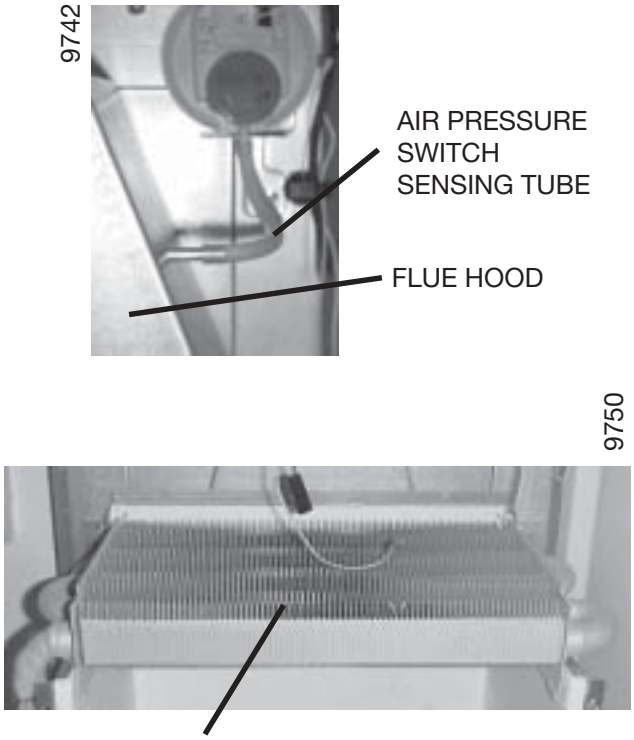

Diagram 15.9

15.12 (F24E Only) Domestic water inlet filter, refer to diagram 15.10

If the water flow rate through the appliance has reduced it may be necessary to clean or replace the domestic water inlet filter.

• Close isolating valve **(b)** on cold water inlet.

• Pull out slotted clip securing the filter in its housing, remove the filter to clean or renew if necessary.

Push the filter fully into its housing and replace the securing clip.

• Open isolating valve, **(b)** diagram 15.2, on cold water inlet and test the Domestic Hot Water circuit for soundness.

15.13 Central Heating Filter, refer to diagram 15.11

Remove the filter retaining clip and filter clean or renew if necessary**.**

Push the filter fully into its housing, ensuring the correct orientation. The flat and hole in the filter as shown. Secure with retaining clip.

15.14 Sealed chamber cover seal check

• Check the condition of the seal, replace as required.

• To replace remove the old seal, thoroughly clean the casing surfaces. Fit new seal, it is supplied to the correct length, **see diagram 18.25.**

15.15 Combustion chamber insulation

• Check the condition of the combustion chamber insulation. If renewing, **refer to Section 18.14.**

15.16 Flue system

• Check externally to make sure that flue is not blocked

• Inspect flue system to make sure that all fittings are secure.

15.17 Reassembly of parts removed for servicing

All parts are replaced in reverse order to removal.

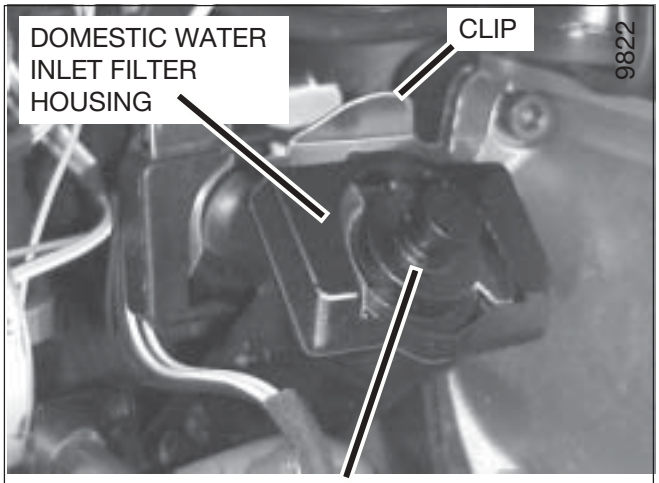

F24E only Diagram 15.10

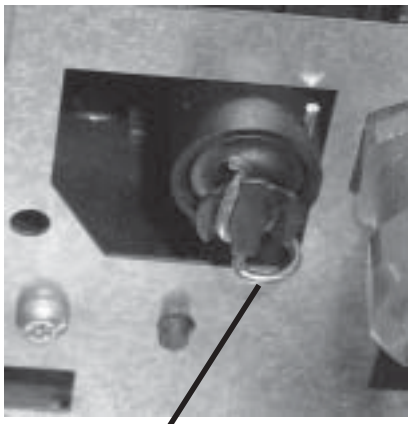

F24E shown Diagram 15.11

16 Fault Finding

Before trying to operate the boiler make sure that :

- All gas supply cocks are open and that the gas supply has been purged of air.
- The heating system pressure is at least 1 bar.
- There is a permanent mains supply to the boiler and that the polarity is correct.

WARNING. Always isolate the boiler from the electrical supply before carrying out any electrical replacement work.

Always check for gas soundness after any service work.

Should there be any doubt about the voltage supply to any of the components, it is possible to carry out a simple electrical test to ensure all is operational in that area.

IMPORTANT: On completion of the fault finding task which has required the breaking or remaking of the electrical connections, the continuity, polarity, short circuit and resistance to earth checks must be repeated using a suitable multimeter.

Overheat thermostat reset button

Refer to **Section 18.10** to locate the overheat thermostat reset button.

Depress the button to reset.

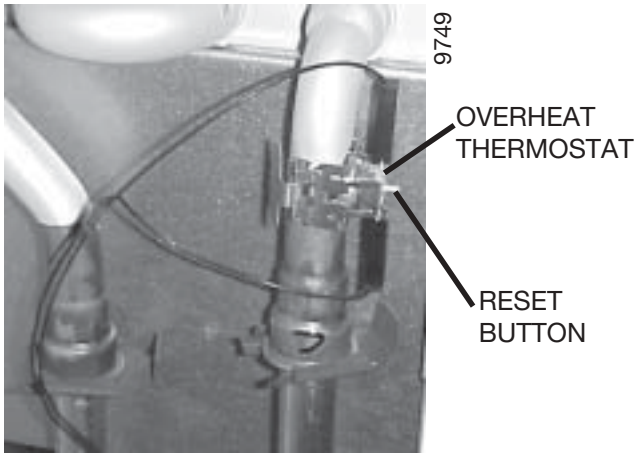

Diagram 16.1

16 Fault Finding

TYPE OF FAULT	CHECK
No display on control panel	• 230V supply • PCB fuse • Connection between PCBs
No domestic hot water **F24E Only)** No central heating (Red flashing warning light and flashing fault code in display)	• Loose connections on control board (PCB) • Connections on air pressure switch (electrical or tubes) disconnected • Faulty control or interface board (PCB's) • Water pressure, flashing pressure • Shortage of air or gas • Faulty temperature sensor • Overheating

COMPONENT TESTING DATA

COMPONENT	NORMAL MEASURE	CHECK
Gas control valve Resistance of coil 116	*Under demand during ignition sparks:* 24V dc for 1 to 2 seconds, then 12Vdc (constant) at the gas control valve electrical connection.	*If 0 Volt:* the gas control valve is not faulty. *If 24 Volts and then 12 Volts but no gas at the burner:* Check if the gas control valve is stuck. If not, check the adjustment valve.
Adjustment valve (step motor)	*Close the gas inlet:* Dismantle the step motor (screw not sealed in). Trigger a demand and check that the valve opens during the ignition.	*If the valve does not move:* Check the connections at both motor and control board (PCB). Change the motor. Replace the control board (PCB).
(F24E Only) Three way valve. Electrical supply to motor 0 between 1 and 3. 9.6k between 1 and 2. 9.6k between 1 and 3. (1, 2 and 3 marked on the motor). Thrust action of the motor. (remove gas control valve before testing)	*When heating is on:* 230V ac between 1 and 2 of the motor. About 25V ac to 35V ac between 2 and 3. *When hot water is on:* 230V ac between 2 and 3 of the motor. About 25V ac to 35V ac between 1 and 2. Unfasten the clip (YES, no risk of water leak), pull out the motor and leave it plugged in. *When hot water is on:* the spindle should pull in. *When heating is on :* the spindle should push out.	*If voltages are different:* Connections. Control board (PCB). Three way valve lead. 3 2 1 If electrical supply is OK. but the motor axle does not move Replace the motor, or replace the control board (PCB).
(F24E Only) Domestic water flow		*To test:* Use a new detector and connect it electrically in place of the faulty one . Blow through to simulate a demand for water.

FAULT: NO HEATING

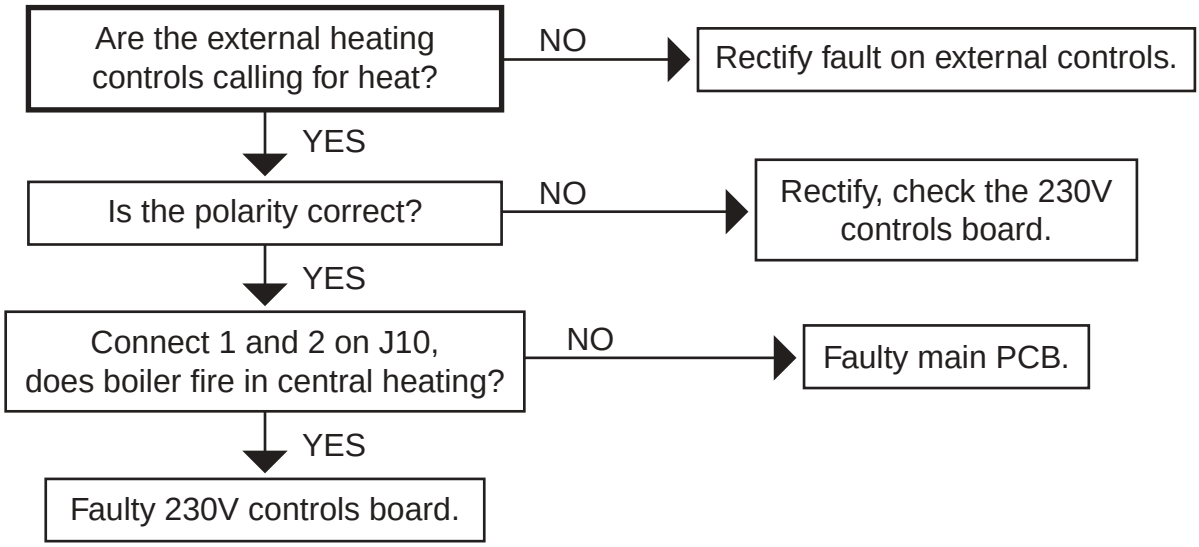

F24E ONLY

FAULT: NO HOT WATER, BUT THE HEATING IS WORKING

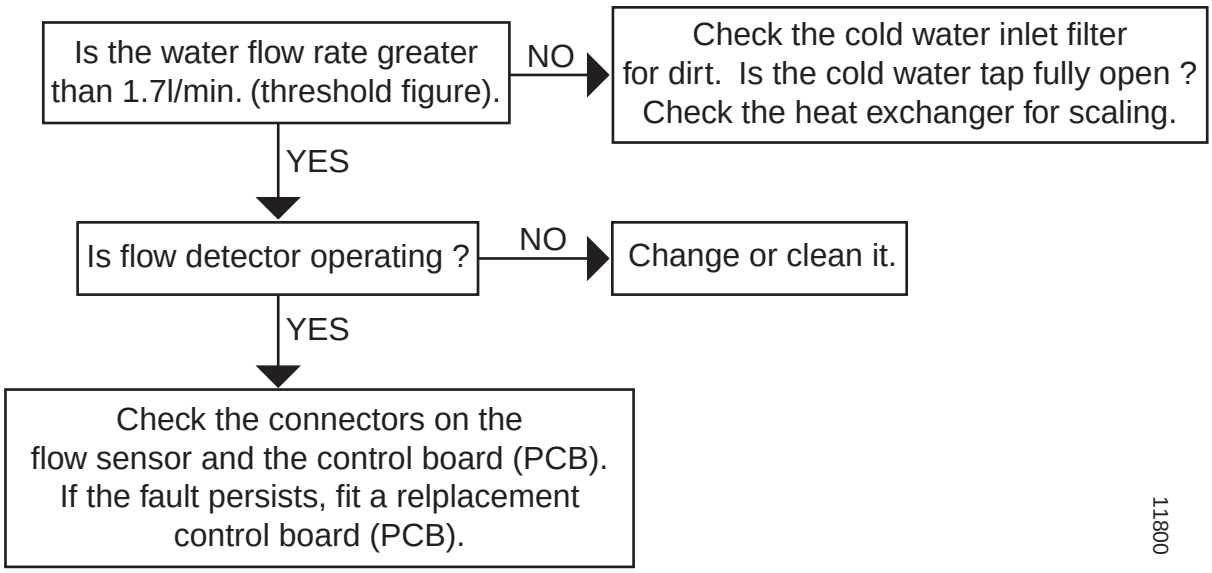

11800

F1 FAULT DISPLAYED
FAULT: THE BURNER LIGHTS BUT THEN GOES OUT. THERE IS NO FLAME DETECTED.

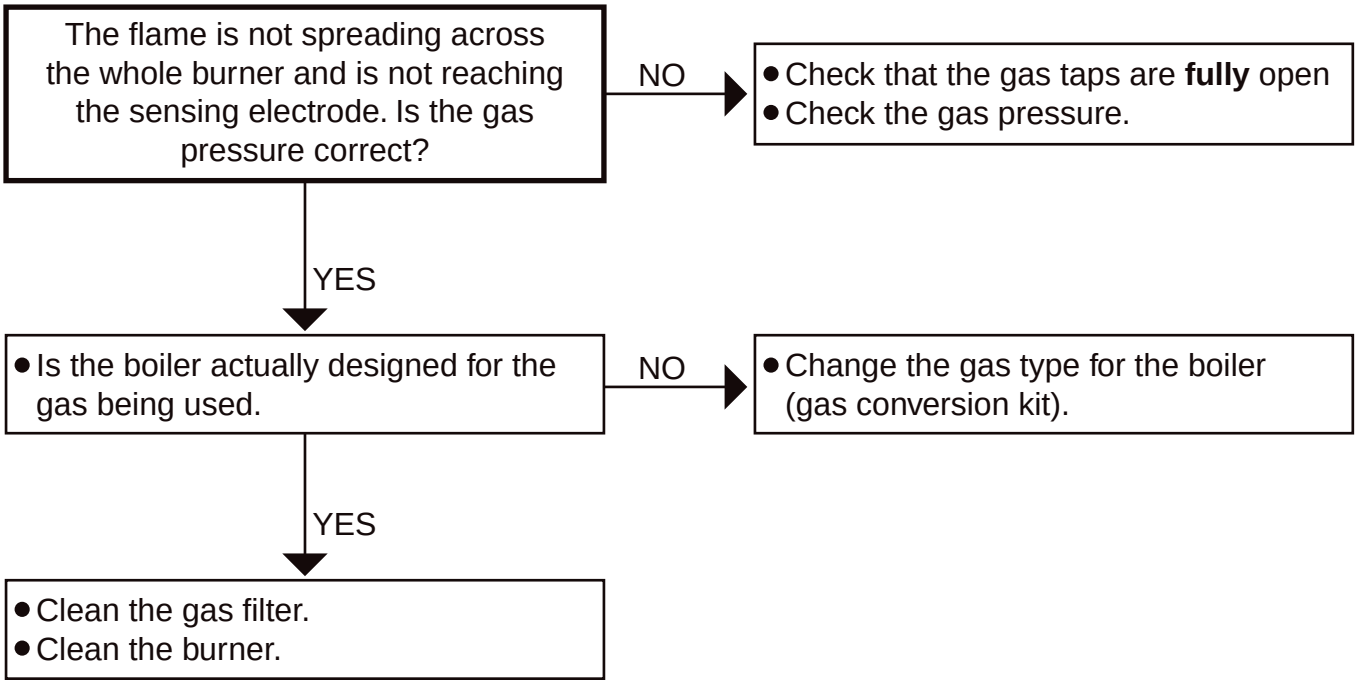

F1 or F4 FAULT DISPLAYED
FAULT: THE BURNER LIGHTS, THEN GOES OUT.

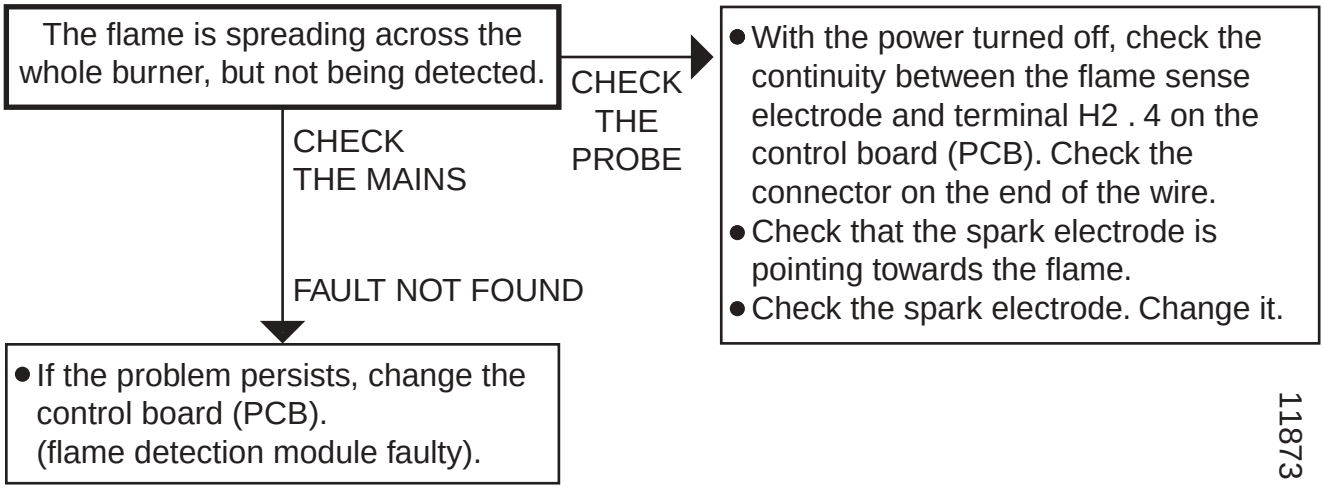

11873

F1 FAULT DISPLAYED

FAULT: THE BURNER DOES NOT LIGHT AT ALL, BUT THERE IS AN IGNITION SPARK.

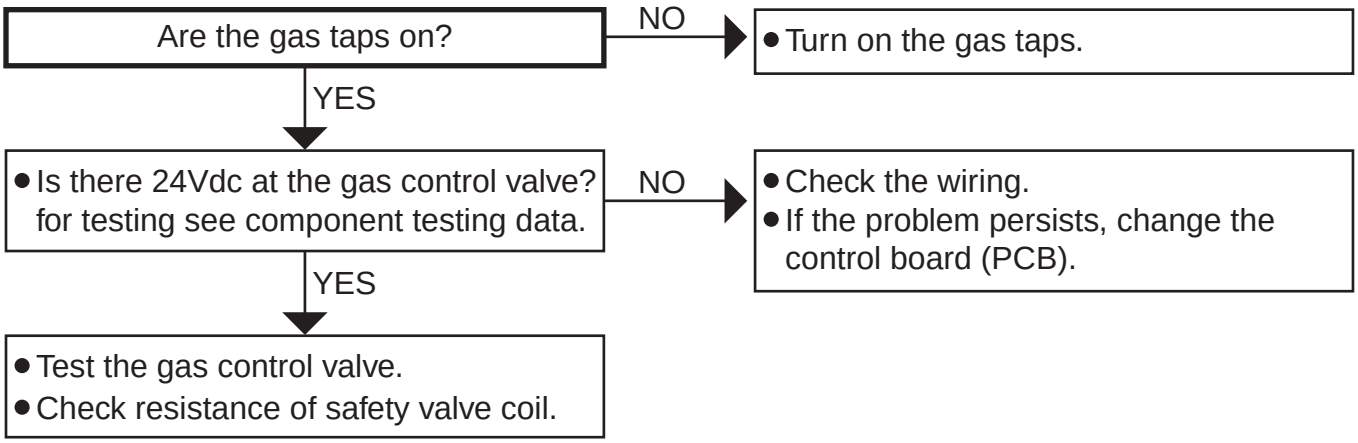

FAULT: THE ROOM TEMPERATURE IS INADEQUATE AND RADIATORS ARE LUKE-WARM.

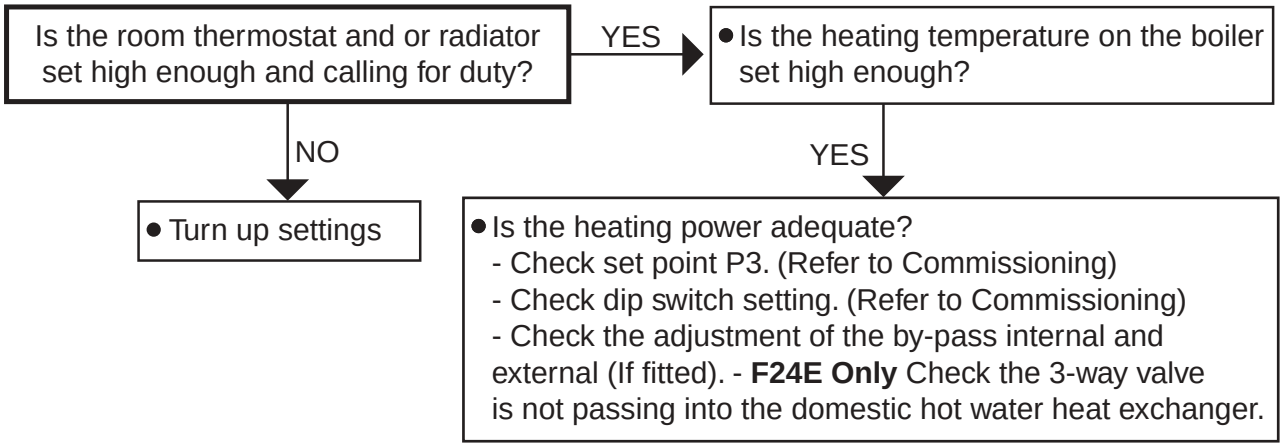

F24E ONLY

FAULT: THE WATER AT THE TAPS IS LUKE-WARM.

Is the temperature higher if you reduce the flow through the taps?

NO →
- Check the 3-way valve is not passing into the radiators. (The radiators should stay cold in Summer setting)

YES ↓
- Check that the cold water inlet restrictor is fitted.
- Check the rate of flow.
- Check burner pressure is correct.

11875

FAULT: THE FAN DOES NOT START.

Is there is 230V ac at fan during demand?

NO → Check continuity of fan harness.

YES ↓ Faulty fan, replace.

YES ↓ Faulty PCB, replace.

11876

FAULT: THE FAN RUNS BUT THERE ARE NO SPARKS.

- **CHECK CONTINUITY OF IGNITION (ELECTRODES AND LEADS)**
- **CHECK POWER SUPPLY FROM PCB TO IGNITION UNIT**

CONNECTIONS TO THE AIR PRESSURE SWITCH

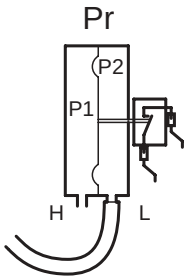

Air flow switch take-off.

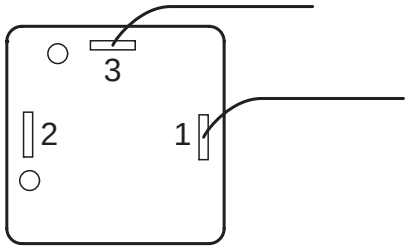

Electrical contacts.

11877

17 Wiring Diagram F24E

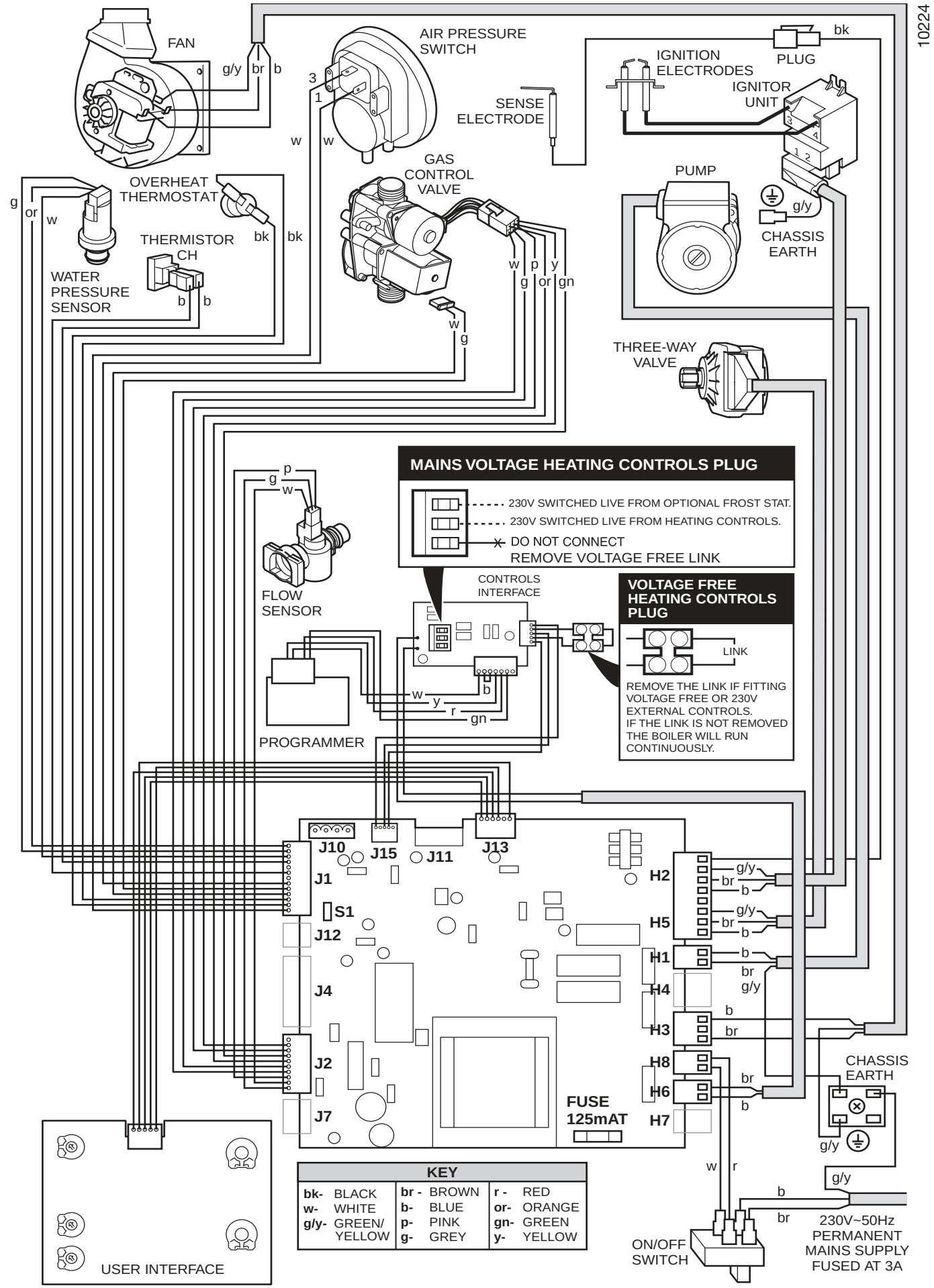

17a Wiring Diagram F18E SB

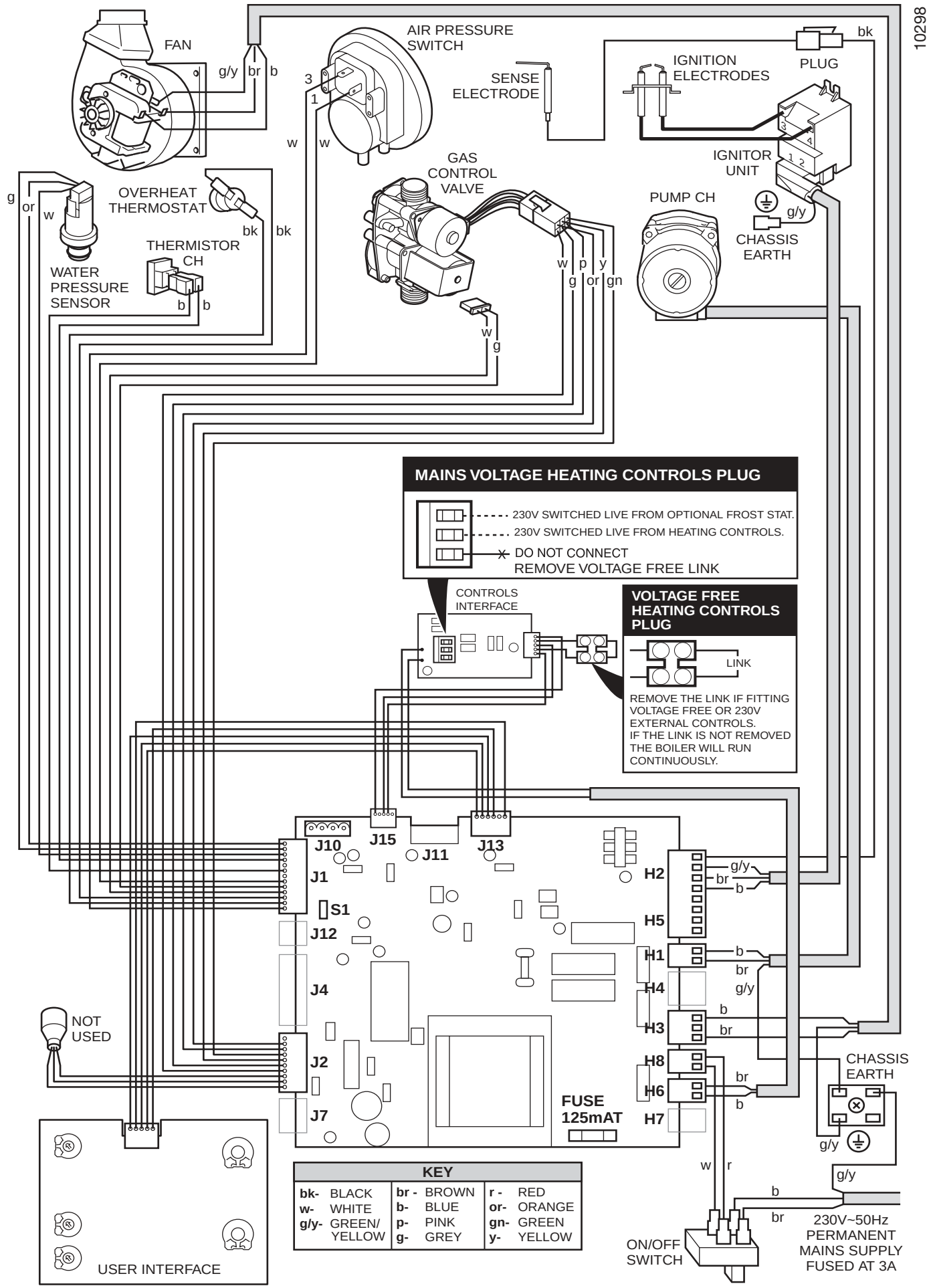

To Drain the central heating circuit

- Open drain valve fitted at the lowest point in the system.
- Allow air into the system by opening a radiator bleed screw or the boilers drain valve **(f)**.

To Drain the Domestic hot water circuit (F24E Only)

- Close boiler isolating valve **(b)**.
- Turn on one or more hot water taps.

To Drain the boiler

- Close the isolating valves **(a), (b) and (c) .**
- Open the boiler drain valve **(f).**

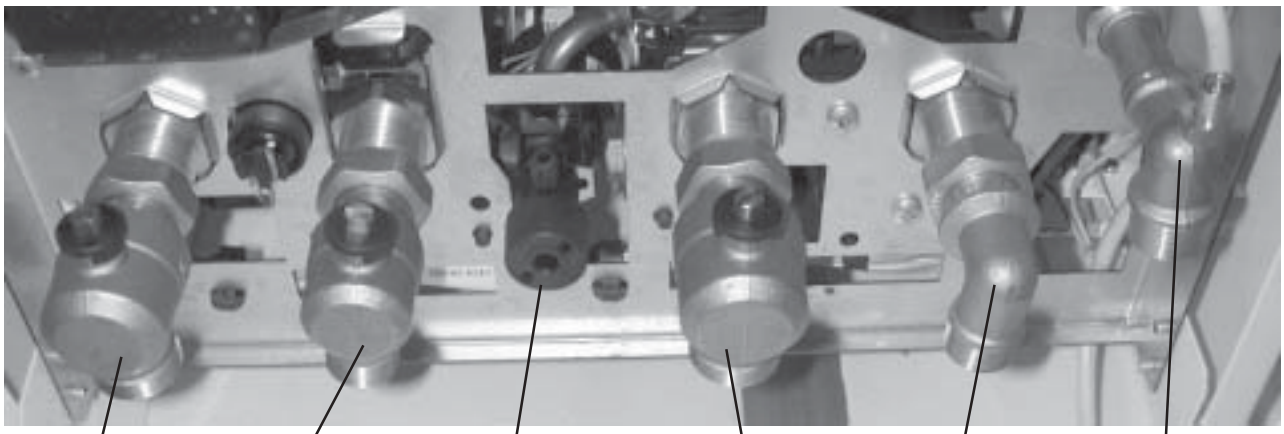

F24E shown

Note: Isolating cocks water and gas are shown in the: OFF position

Diagram 18.1

IMPORTANT INFORMATION

WARNING: Before commencing the replacement of any component, isolate appliance from electrical supply and turn off gas at service cock.

Replacement of parts must be carried out by a competent person.

When replacing components it may be necessary to renew sealing washers, gaskets and 'O' rings. If new ones are supplied with replacement components they must be used.

All parts are replaced in reverse order to removal.

If any gas-carrying components are disturbed, removed or replaced it will be necessary on completion of assembly to test for gas soundness and purge in accordance with the current issue of BS6891 or in IE, the current edition of I.S.813 "Domestic Gas Installations".

18.1 Central heating thermistor

Before starting refer to the front of **Section 18 Important information.**

- Remove the front panel**, refer to Section 15.3.**
- Lower the control panel**, refer to Section 15.4.**

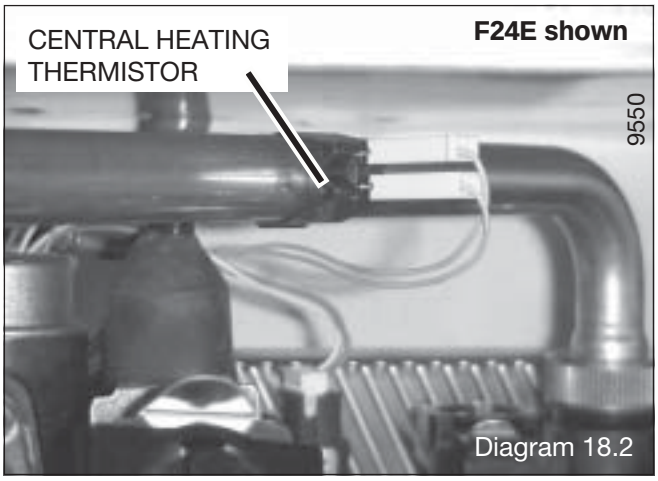

Diagram 18.2

- Locate central heating thermistor on heating flow pipe on centre of boiler, **see diagram 18.2**.
- Unclip thermistor from pipe.
- Disconnect electrical connections from thermistor.
- Fit electrical connections to replacement thermistor and fit thermistor to pipe. The polarity is not important.

18.2 Fan.

Before starting refer to the front of **Section 18 Important information.**

• Remove the front panel**, refer to Section 15.3.**

• Remove the sealed chamber cover**, refer to Section 15.5.**

• Remove the fan, **refer to Section 15.10.**

18.3 Air pressure switch

Before starting refer to the front of **Section 18 Important information.**

• Remove the front panel**, refer to Section 15.3.**

• Remove the sealed chamber cover**, refer to Section 15.5.**

• Locate air pressure switch situated at the top right hand side, **see diagram 18.3**.

• Remove air pressure switch tube.

Note: Do not fit tube until the air pressure switch is in position.

• Disconnect air pressure switch electrical connections.

• Unclip to remove air pressure switch.

18.4 (F24E Only) Domestic water inlet filter

If the water flow rate through the appliance has reduced it may be necessary to clean or replace the water inlet filter, **refer to section 15.12**.

Before starting refer to the front of **Section 18 Important information.**

• Remove the front panel**, refer to Section 15.3.**

• Lower the control panel**, refer to Section 15.4.**

• Clean or replace the water inlet filter, **refer to Section 15.12.**

18.5 Central Heating Filter

It may be necessary to clean or replace the central heating filter.

Before starting refer to the front of **Section 18 Important information.**

• Isolate flow and return valves **(a)** and **(c)**.

• Clean or replace the central heating filter, **refer to Section 15.13.**

18.6 (F24E Only) Cold water inlet restrictor

Before starting refer to the front of **Section 18 Important information.**

• Remove the front panel**, refer to Section 15.3.**

• Lower the control panel**, refer to Section 15.4.**

• Isolate cold water inlet valve **(b)**.

Drain down domestic hot water circuit of boiler only, **refer to relevant part of diagram 18.1**.

• Undo union nuts from boiler cold water in isolating valve.

• Clean and inspect restrictor, replace if necessary, **see diagram 18.4**.

18.7 Burner, refer to Section 15.9.

Before starting refer to the front of **Section 18 Important information.**

• Remove the front panel**, refer to Section 15.3.**

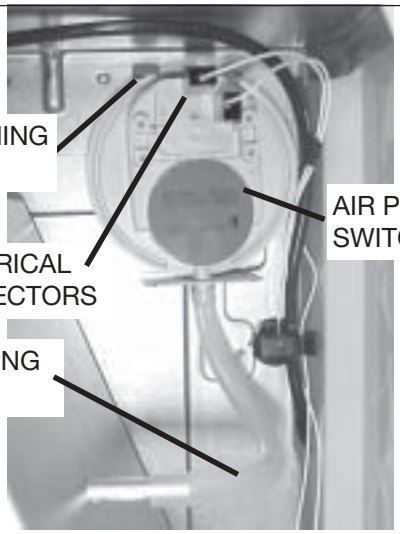

Diagram 18.3

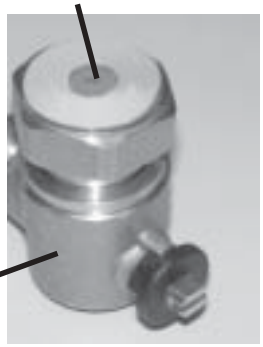

F24E Only Diagram 18.4

• Lower the control panel**, refer to Section 15.4.**

• Remove the sealed chamber cover**, refer to Section 15.5.**

• Remove the combustion chamber cover**, refer to Section 15.7.**

• Remove burner from boiler, **refer to Section 15.9.**

18.8 Burner injectors, refer to diagram 18.5.

Before starting refer to the front of **Section 18 Important information.**

• Remove the front panel**, refer to Section 15.3.**

• Lower the control panel**, refer to Section 15.4.**

• Remove the sealed chamber cover**, refer to Section 15.5.**

• Remove the combustion chamber cover**, refer to Section 15.7.**

• Remove burner from boiler, **refer to Section 15.9.**

• Remove and replace injectors as required.

Note: The injectors may be cleaned, remove injectors inspect and clean. ***Do not use a wire or sharp implement.***

Note: Make sure that injector size, marked on each injector, is the same as that given in '**Section 1 Technical Data**' for the type of gas being used.

18.9 Burner injector assembly, refer to diagram 18.6.

Before starting refer to the front of **Section 18 Important information.**

• Remove the front panel**, refer to Section 15.3.**

• Lower the control panel**, refer to Section 15.4.**

• Remove the sealed chamber cover**, refer to Section 15.5.**

• Remove the combustion chamber cover**, refer to Section 15.7.**

• Remove burner from boiler, **refer to Section 15.9.**

• Undo the gas supply union nut from under the sealed chamber.

Note: The fibre washer between the burner injector assembly and gas supply must be kept for use on reassembly.

• Undo and remove the sense and ignition electrode assemblies.

• Remove the burner injector assembly securing screws.

• Remove the burner injector assembly by lifting up, easing the gas connection through the grommet in the sealing chamber.

Note: Take care not to damage the insulation.

• When refitting burner injector assembly ensure the gas connection locates correctly through the grommet.

Note: Make sure that injector size, marked on each injector, is the same as that given in '**Section 1 Technical Data**' for the type of gas being used.

18.10 Overheat thermostat

Before starting refer to the front of **Section 18 Important information.**

• Remove the front panel**, refer to Section 15.3.**

• Remove the sealed chamber cover**, refer to Section 15.5.**

• Locate overheat thermostat on heating flow pipe on right hand side of boiler, **see part of diagram 18.7**.

• Disconnect electrical connections from thermostat

• Remove the thermostat and bracket assembly from heating flow pipe by unclipping at the side of the bracket. Remove the thermostat, fit new thermostat and replace assembly.

• When refitting electrical connections to replacement thermostat the polarity is not important.

18.11 Ignition electrode

Before starting refer to the front of **Section 18 Important information.**

• Remove the front panel**, refer to Section 15.3.**

• Lower the control panel**, refer to Section 15.4.**

• Remove the sealed chamber cover**, refer to Section 15.5.**

• Remove the combustion chamber cover**, refer to Section 15.7.**

• Remove burner from boiler, **refer to Section 15.9.**

• Remove the left hand side panel**, refer to Section 15.6.**

• Undo and remove screw securing electrode assembly to the burner injector assembly**, see diagram 18.6.**

• Disconnect the electrical connections at the ignition unit**, see diagram 18.22.** Note the routing of the cables.

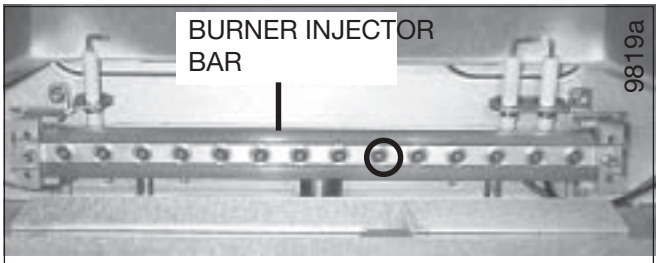

Diagram 18.5

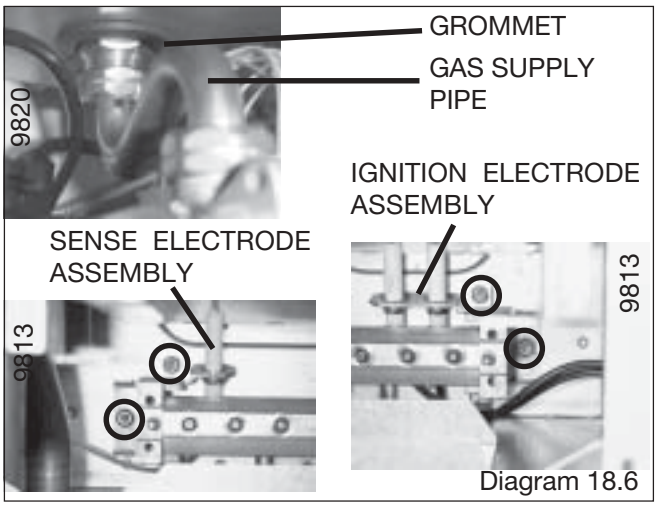

Diagram 18.6

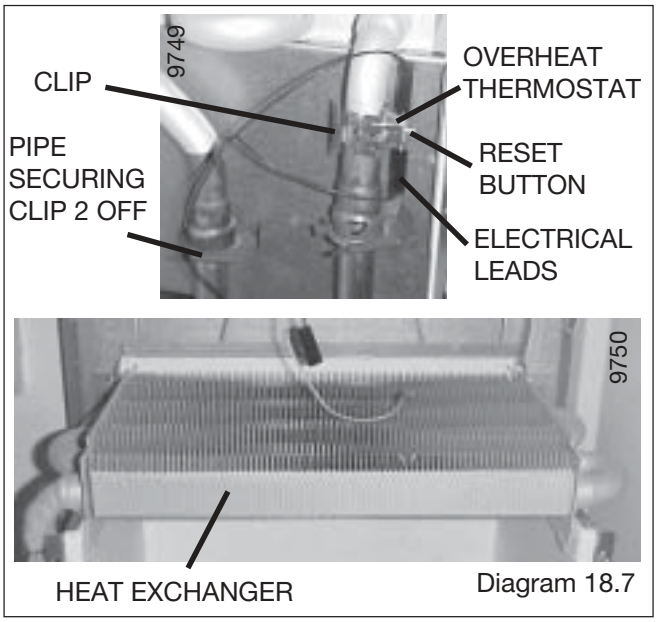

Diagram 18.7

18.12 Flame sense electrode

Before starting refer to the front of **Section 18 Important information.**

• Remove the front panel**, refer to Section 15.3.**

• Lower the control panel**, refer to Section 15.4.**

• Remove the sealed chamber cover**, refer to Section 15.5.**

• Remove the combustion chamber cover**, refer to Section 15.7.**

• Remove burner, **refer to Section 15.9**.

• Remove the right hand side panel**, refer to Section 15.6.**

• Undo and remove screw securing sense assembly to the burner injector assembly**, see diagram 18.6.**

• Disconnect the electrical connection from the inline connector**,** Note the routing of the cable.

18.13 Heat exchanger, refer to diagram 18.7.

Before starting refer to the front of **Section 18 Important information.**

- Remove the front panel**, refer to Section 15.3.**
- Remove the sealed chamber cover**, refer to Section 15.5.**
- Remove the combustion chamber cover**, refer to Section 15.7.**
- Drain down central heating water circuit of the boiler only, **refer to relevant part of diagram 18.1**.
- Remove the fan, **refer to Section 15.10.**
- Remove air pressure switch sensing tube from the side of the flue hood**, see diagram 15.9.**
- Release both side panels, **refer to section 15.6.**
- Remove the flue hood, lift up and off. When refitting ensure the rear of the flue hood locates in the tabs.
- Disconnect the electrical leads from the overheat thermostat.
- Remove the two pipe securing clips.
- Lift to remove the heat exchanger taking, care not to damage the insulation.

18.14 Combustion chamber insulation, refer to diagram 18.8.

Before starting refer to the front of **Section 18 Important information.**

- Remove the front panel**, refer to Section 15.3.**
- Remove the sealed chamber cover**, refer to Section 15.5.**
- Remove the combustion chamber cover**, refer to Section 15.7.**
- Remove the heat exchanger, **refer to Section 18.13.**
- Pull out side insulation panels from combustion chamber.
- Tilt rear insulation panel forwards and out.
- Fit replacement insulation.

18.15 Printed circuit board (PCB), refer to diagram 18.9.

Before starting refer to the front of **Section 18 Important information.**

- Remove the front panel**, refer to Section 15.3.**
- Lower the control panel**, refer to Section 15.4.**
- Undo and remove the two front retaining screws.
- Hinge up the control panel cover and ease forwards from the rear retaining lugs to gain access to PCB. Do not strain the cables attached to the PCB. Note the routing of the cables.
- Carefully pull off electrical connections to PCB.
- Unclip and lift out PCB.
- Fit replacement PCB. Be careful not trap any of the cables.

Make sure that PCB connections are fully pushed onto replacement PCB.

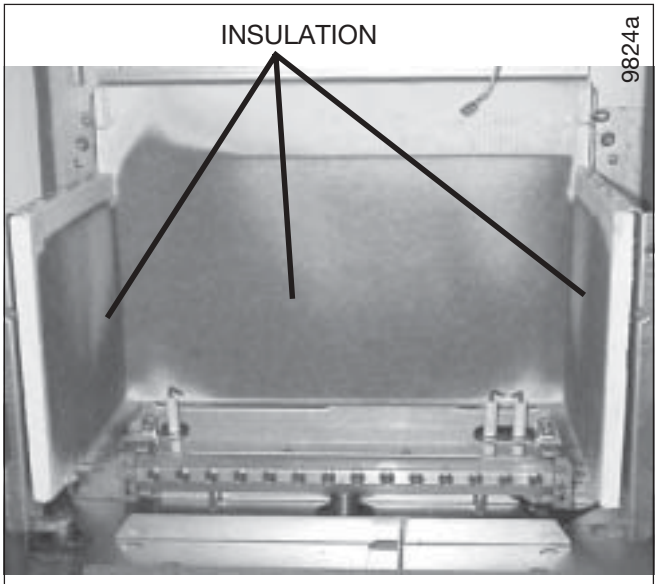

Diagram 18.8

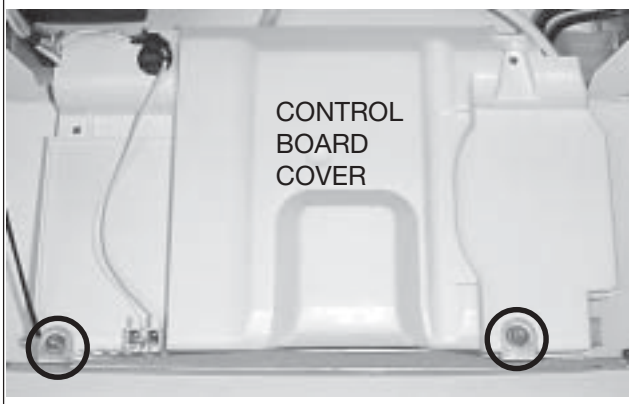

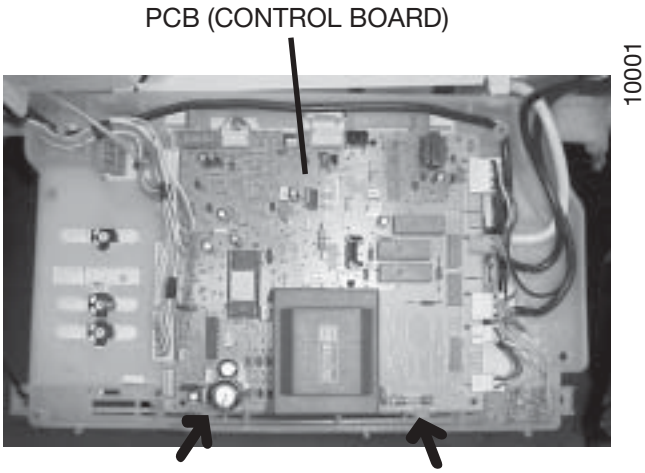

F24E shown

Diagram 18.9

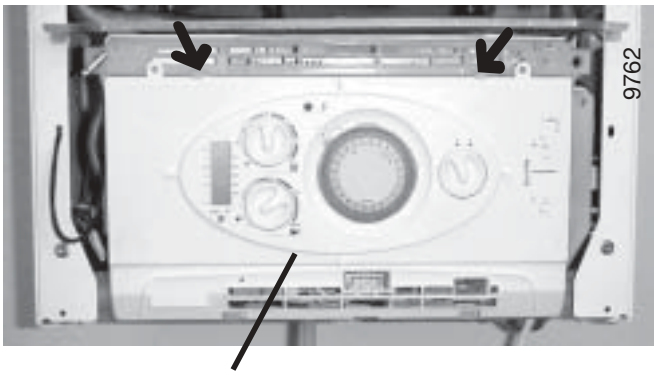

F24E shown

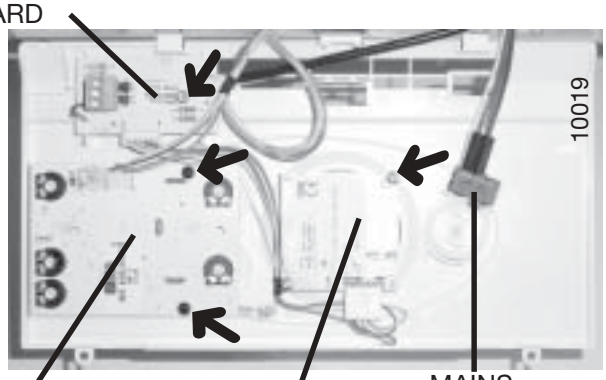

Diagram 18.10

18.16 User interface board, refer to diagram 18.10.

Before starting refer to the front of **Section 18 Important information.**

• Remove the front panel, **refer to Section 15.3.**

• Unclip control panel user interface and hinge forward . Do not strain the cables.

• Disconnect the electrical connections from the user inter face board.

• Remove the two user inter face board retaining screws.

• Remove the user inter face board.

18.17 Mains switch, refer to diagram 18.10.

Before starting refer to the front of **Section 18 Important information.**

• Remove the front panel, **refer to Section 15.3.**

• Unclip control panel user interface and hinge forward . Do not strain the cables.

• Disconnect the electrical connections from mains switch.

• Remove the mains switch.

18.18 230V Controls board, refer to diagram 18.10.

Before starting refer to the front of **Section 18 Important information.**

• Remove the front panel, **refer to Section 15.3.**

• Unclip control panel user interface and hinge forward . Do not strain the cables.

• Disconnect the electrical connection from the 230V controls board and the electrical connection from printed circuit board (PCB).

• Remove the 230V controls board retaining screw.

• Remove the 230V controls board.

18.19 (F24E Only) Analogue programmer, refer to diagram 18.10

Before starting refer to the front of **Section 18 Important information.**

• Remove the front panel**, refer to Section 15.3.**

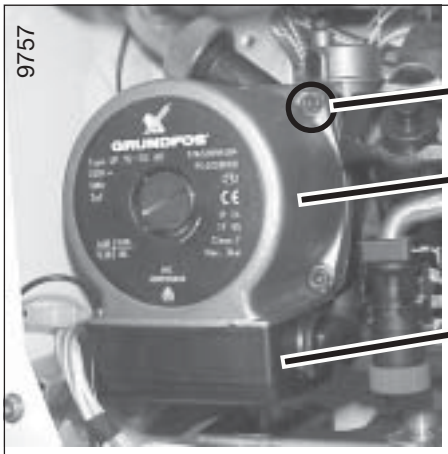

F24E shown

Diagram 18.11

• Unclip control panel user interface and hinge forward. Do not strain the cables.

• Disconnect the electrical connection from the programmer.

• Undo the two securing screws and remove the programmer.

18.20 Central heating pump head, refer to diagram 18.11.

Before starting refer to the front of **Section 18 Important information.**

• Remove the front panel**, refer to Section 15.3.**

• Lower the control panel**, refer to Section 15.4.**

• Drain down central heating water circuit of the boiler only, **refer to relevant part of diagram 18.1**.

Note: it is not necessary to drain down the entire heating system to carry out this work.

• For ease of access if required remove the right hand side panel, refer to **Section 15.6.**

• Undo four head fixing screws and remove pump head.

• Gain access to the pump electrical connection box and remove cover.

• Disconnect pump cable from pump (avoid straining cables).

• Connect electrical connection to replacement pump head.

• Fit replacement pump head.

18.21 (F24E Only) Filling system tap, refer to diagram 18.12.

Before starting refer to the front of **Section 18 Important information.**

- Remove the front panel**, refer to Section 15.3.**
- Lower the control panel**, refer to Section 15.4.**
- Drain down the hotwater circuit, **refer to relevant part of diagram 18.1**.
- Pull of the filling loop tap extension.
- Pull out slotted metal clip securing tap into housing, remove tap.
- Pull out slotted metal clip and remove pipe from tap.

18.22 (F24E Only) Reduced pressure zone valve (RPZ), refer to diagram 18.12.

Before starting refer to the front of **Section 18 Important information.**

- Remove the front panel**, refer to Section 15.3.**
- Lower the control panel**, refer to Section 15.4.**
- Drain down the boiler only, **refer to relevant part of diagram 18.1**.
- Pull out slotted metal clip securing pipe to RPZ.
- Pull out slotted metal clip securing RPZ into housing, remove RPZ.

18.23 Boiler drain point, refer to diagram 18.13.

Before starting refer to the front of **Section 18 Important information.**

- Remove the front panel**, refer to Section 15.3.**
- Lower the control panel**, refer to Section 15.4.**
- Drain down the boiler only, **refer to relevant part of diagram 18.1**.

Pull out slotted metal clip securing boiler drain valve into housing, remove boiler drain valve.

18.24 (F24E Only) Water flow sensor, refer to diagram 18.14.

Before starting refer to the front of **Section 18 Important information.**

- Remove the front panel**, refer to Section 15.3.**
- Lower the control panel**, refer to Section 15.4.**

Drain down the hotwater circuit, **refer to relevant part of Section 18.1**.

- Undo the union nut on the cold water inlet isolating valve.
- Pull out slotted metal clip securing filling system tap into housing, swing the tap forwards.
- Pull out the two slotted metal clips retaining the domestic water inlet filter housing.
- Remove domestic water inlet filter housing.
- Remove electrical connections from water flow sensor.
- Pull off slotted metal clip and remove water flow sensor.

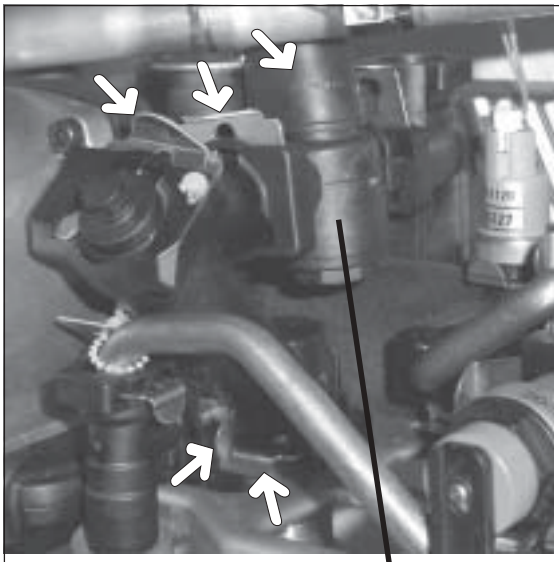

F24E only Diagram 18.14

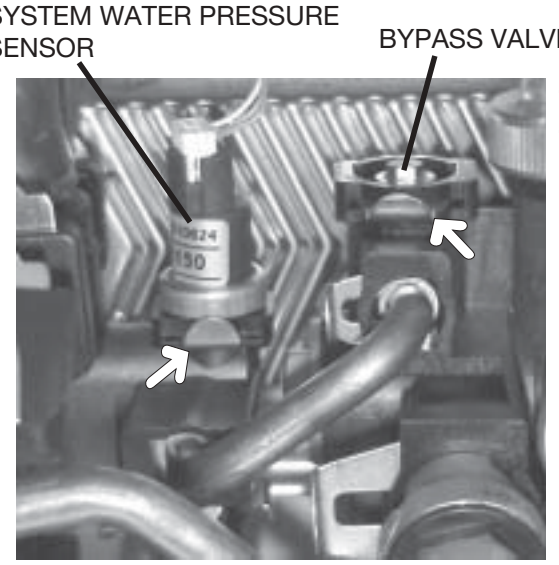

F24E shown Diagram 18.15

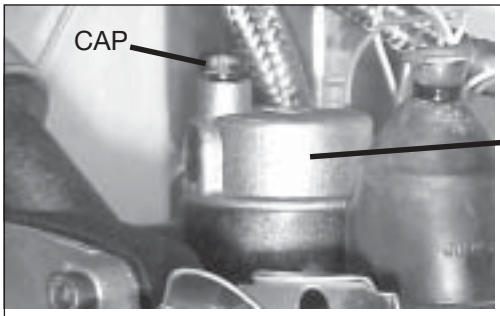

F24E shown Diagram 18.16

18.25 System water pressure sensor, refer to diagram 18.15.

Before starting refer to the front of **Section 18 Important information.**

• Remove the front panel**, refer to Section 15.3.**

• Lower the control panel**, refer to Section 15.4.**

Drain down the boiler, **refer to relevant part of Section 18.1**.

• Remove electrical connections from water pressure sensor.

• Pull off slotted metal clip and remove water pressure sensor.

Please ensure that the new "O" ring and clip supplied are fitted.

18.26 Bypass valve, refer to diagram 14.1.

Before starting refer to the front of **Section 18 Important information.**

• Remove the front panel**, refer to Section 15.3.**

• Lower the control panel**, refer to Section 15.4.**

Drain down the boiler, **refer to relevant part of Section 18.1**.

• Remove the ignition unit, **refer to Section 18.33.**

Pull out slotted metal clip, ease out bypass valve from bypass valve housing.

18.27 Automatic air vent, refer to diagram 18.16.

Before starting refer to the front of **Section 18 Important information.**

• Remove the front panel**, refer to Section 15.3.**

• Lower the control panel**, refer to Section 15.4.**

• Drain down the boiler only, **refer to relevant part of diagram 18.1**.

• Unscrew to remove automatic air vent.

• After fitting replacement automatic air vent ensure the cap is open.

18.28 Gas Control valve, refer to diagram 18.17.

Before starting refer to the front of **Section 18 Important information.**

• Remove the front panel**, refer to Section 15.3.**

• Lower the control panel**, refer to Section 15.4.**

• Disconnect gas supply pipes union nuts at the gas control valve.

• Disconnect supply pipe union nut at the burner injector bar.

• Remove the locking nut and brass washer from underside of gas control valve.

• Ease gas control valve forwards and disconnect electrical connections to gas control valve.

• Withdraw gas control valve assembly.

Note: Use the new washers supplied with the gas control valve.

• Fit gas valve restrictor to replacement gas control value.

• Fit replacement gas control valve.

Check the Min. gas pressure and if it requires adjusting, refer to Section 13 Changing Gas Type.

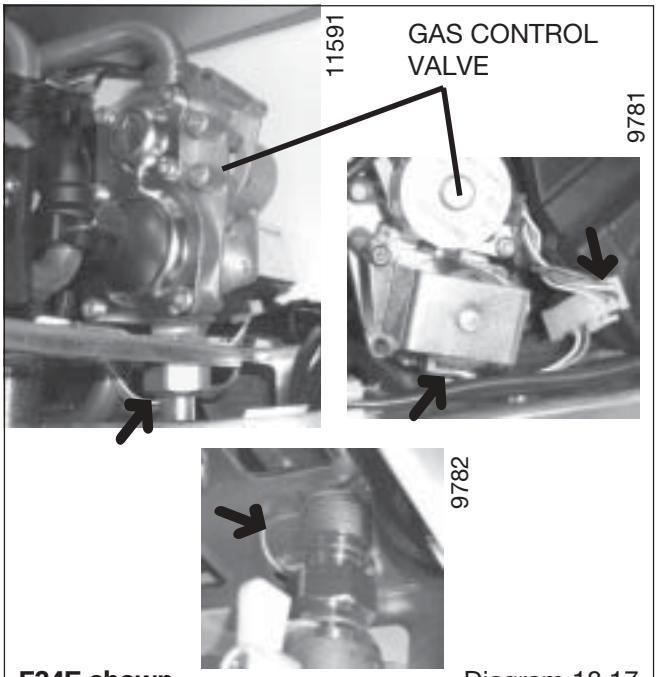

F24E shown Diagram 18.17

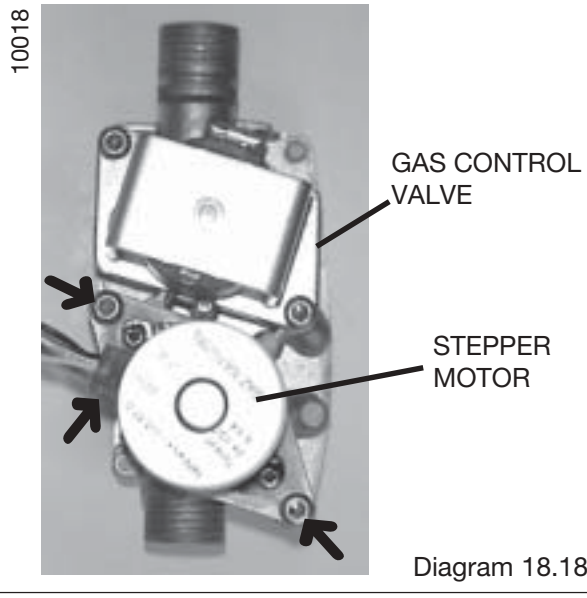

Diagram 18.18

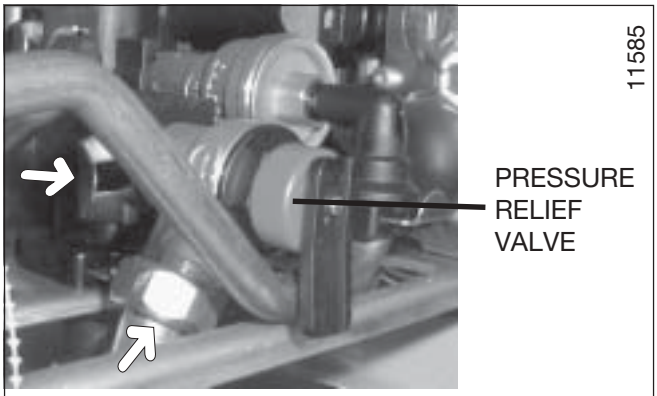

F24E shown Diagram 18.19

18.29 Gas control valve stepper motor, refer to diagram 18.18

Before starting refer to the front of **Section 18 Important information.**

- Remove the front panel**, refer to Section 15.3.**
- Lower the control panel**, refer to Section 15.4.**
- Remove the gas control valve**, refer to Section 18.28.**
- Disconnect the electrical connection from stepper motor.
- Remove the two screws securing stepper motor to the gas control valve.
- Fit replacement gas control valve stepper motor.
- Note: Take care not to damage the 'O' ring.

18.30 Discharge safety valve, refer to diagram 18.19.

Before starting refer to the front of **Section 18 Important information.**

- Remove the front panel**, refer to Section 15.3.**
- Lower the control panel**, refer to Section 15.4.**
- Undo discharge pipe union nut.
- Pull out slotted metal clip from valve body and remove valve.

18.31 (F24E Only) Three-way valve head, refer to diagram 18.20.

Before starting refer to the front of **Section 18 Important information.**

- Remove the front panel**, refer to Section 15.3.**
- Lower the control panel**, refer to Section 15.4.**
- Remove gas control valve, **refer to Section 18.28.** (It will not be necessary to remove the gas control electrical cables).
- Remove electrical plug from valve head.
- Pull out slotted metal clip from valve body and remove valve head from body.
- Fit replacement valve head.

Note :

1) When refitting clip, ensure that letters YES are as shown.

2) It is not necessary to drain boiler to carry out this work.

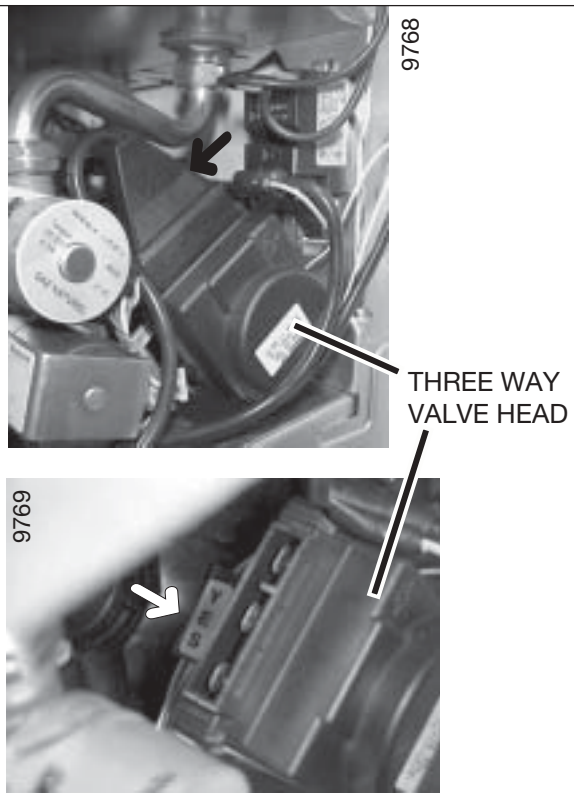

F24E only Diagram 18.20

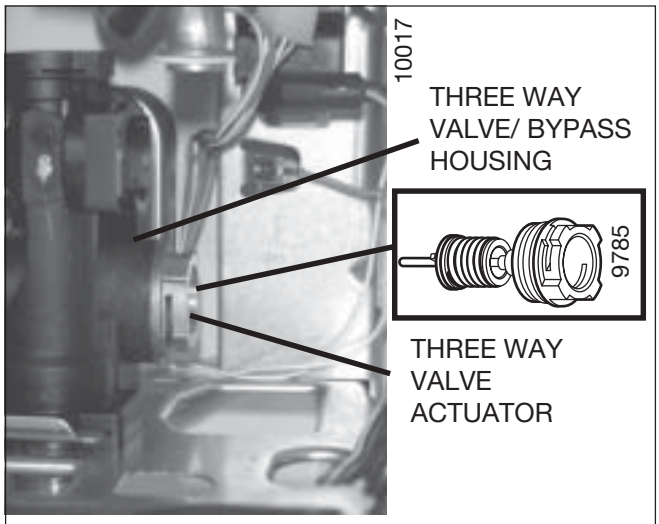

F24E only Diagram 18.21

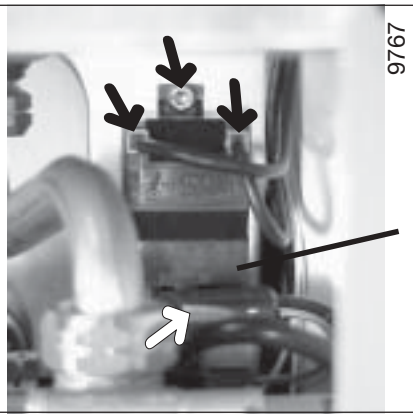

Diagram 18.22

18.32 (F24E Only) Three-way valve actuator, refer to diagram 18.21.

Before starting refer to the front of **Section 18 Important information.**

- Remove the front panel**, refer to Section 15.3.**
- Lower the control panel**, refer to Section 15.4.**
- Drain down the boiler only, **refer to relevant part of diagram 18.1**.
- Remove the gas control valve, **refer to Section 18.28.**
- Remove 3-way valve head, **refer to Section 18.31.**
- Remove the three way valve actuator**.**

18.33 Ignition unit, refer to diagram 18.22.

Before starting refer to the front of **Section 18 Important information.**

- Remove the front panel**, refer to Section 15.3.**
- Lower the control panel**, refer to Section 15.4.**
- For ease of access remove the left hand side panel**, refer to Section 15.6.**
- Disconnect electrical connections.
- Remove ignition unit securing screw.
- Pull upwards to release and remove the ignition unit from the retaining slot.

18.34 (F24E Only) Domestic hot water plate to plate heat exchanger

Before starting refer to the front of **Section 18 Important information.**

- Remove the front panel**, refer to Section 15.3.**
- Lower the control panel**, refer to Section 15.4.**
- Drain down the boiler and hotwater circuit ,**refer to relevant parts of diagram 18.1**.
- Unclip the central heating thermistor.
- Unscrew the heating flow pipe union nut, swing pipe forwards.
- Remove the gas supply pipe between the gas control valve and injector bar, **see diagram 18.23.**
- Disconnect the union connection from the expansion vessel.
- Supporting domestic hot water plate to plate heat exchanger, unscrew and remove two screws securing it onto pump mounting and 3-way valve/bypass housing.
- Remove plate to plate heat exchanger from boiler.
- Fit replacement plate to plate heat exchanger.

Note: Plate to plate heat exchanger mounting screws are offset to ensure correct fitting.

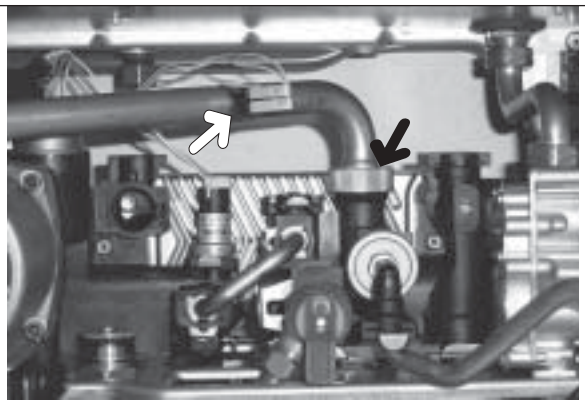

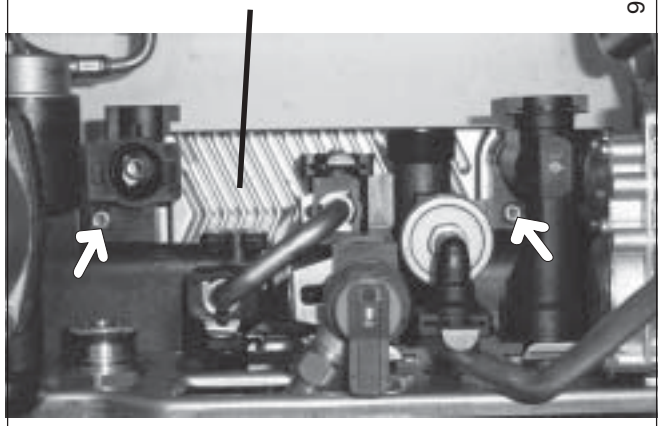

F24E only Diagram 18.23

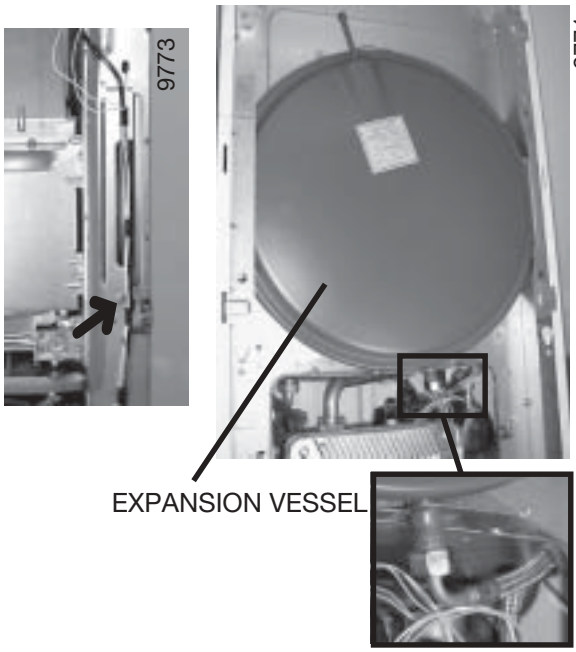

F24E shown Diagram 18.24

18.35 Expansion vessel

Renewal of the expansion vessel requires the boiler to be removed from the wall. As an alternative, a separate expansion vessel of the same specification may be connected as close as possible to the boiler, leaving the original in position, refer to the installation instructions.

Replacing the expansion vessel

Before starting refer to the front of **Section 18 Important information.**

• For this operation the boiler must be removed from the wall.

• **IMPORTANT:** With regards to the manual handling operations, 1992 regulations, the following operation exceeds the recommended weight for one man lift.

• Remove the front panel**, refer to Section 15.3.**

• Lower the control panel**, refer to Section 15.4.**

• Drain down the boiler only ,**refer to relevant parts of diagram 18.1**.

• Disconnect the flue system.

• Disconnect the fixing jig connection pipes at the boiler.

• Disconnect the pressure relief valve discharge pipe.

• Disconnect the mains cable and any external controls cables.

• Lift up to remove the boiler from the wall.

• Remove sealed chamber cover, **refer to Section 15.4.**

• Remove the right hand side panel**, refer to Section 15.6.**

• From the rear of the boiler, unclip wiring harness retaining wire.

• Undo pipe coupling on expansion vessel.

• Unscrew and remove expansion vessel bracket retaining screw.

• Slide expansion vessel to the left and forward to remove.

Note: Check that expansion vessel pressure is correct**, see 'Section 1 Technical Data'.**

18.36 Sealed chamber cover seal, refer to diagram 18.25

Before starting refer to the front of **Section 18 Important information.**

• Remove the front panel, **refer to Section 15.3.**

• Remove the sealed chamber cover, **refer to Section 15.5.**

• Remove the old seal, thoroughly clean the casing. Fit the new seal, it is supplied to the correct length.

Note: Ensure the seal is fitted correctly giving an air tight seal.

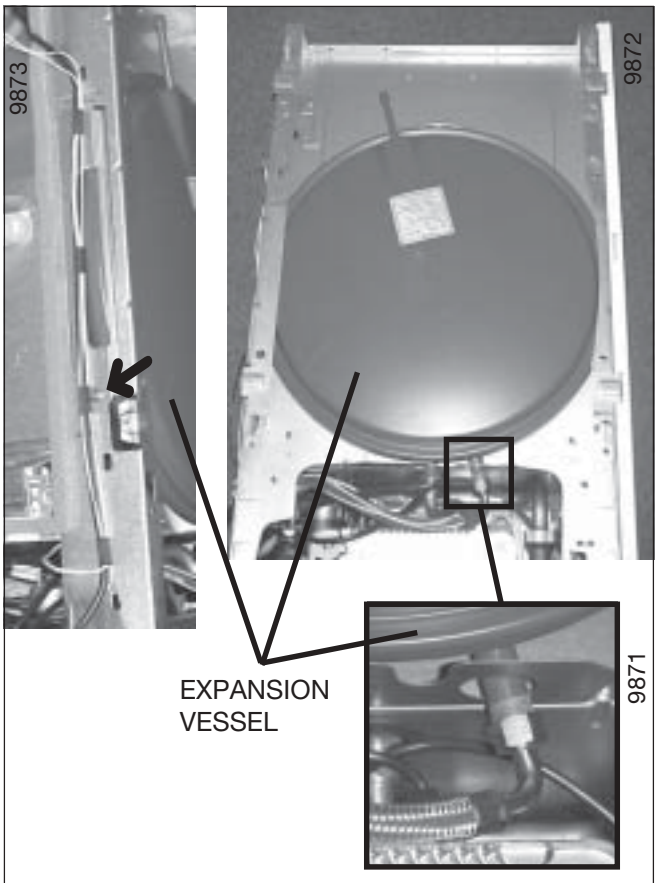

F24E shown Diagram 18.24

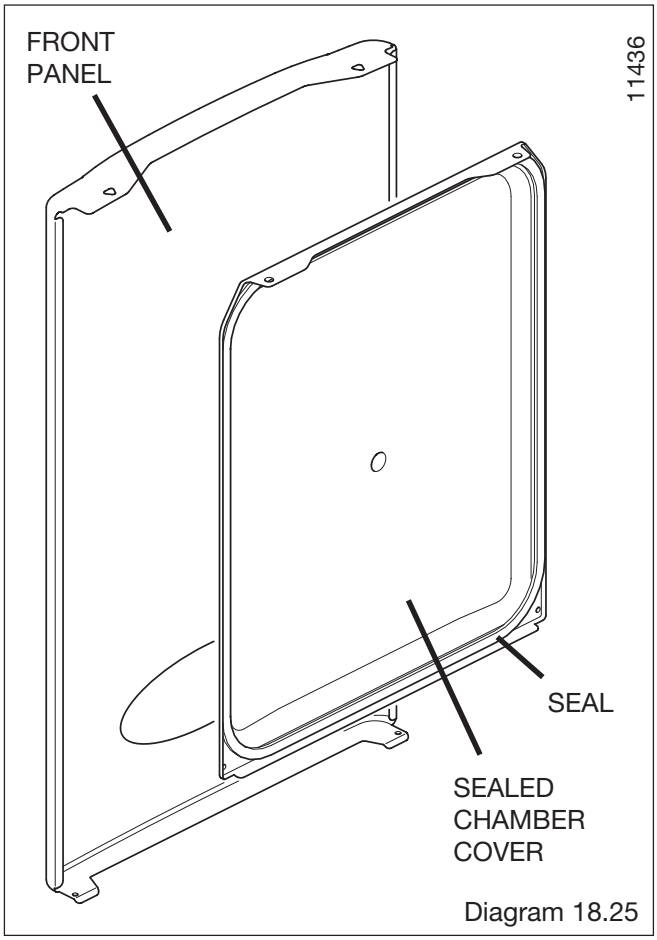

Diagram 18.25

19 Spare parts

When ordering spare parts, quote the part number and description, stating the appliance model number and serial number from the data badge.

Short parts list

No.	Description	Part No.	G.C. No.
1	Central heating thermistor	S57398	•••••••
2	Fan	S10088	•••••••
3	Air pressure switch	S10089	•••••••
4	**F24E only** Domestic water flow sensor	S57202	•••••••
5	Printed circuit board - Main	S10082	•••••••
6	Pump head	S10052	•••••••
7	System water pressure sensor	S57205	•••••••
8	Gas control valve (G20)	S10045	•••••••
9	Gas control valve (G30)	S10046	•••••••
10	Discharge safety valve	S10067	•••••••
11	Overheat thermostat	S10080	•••••••
12	Ignition electrode	S10038	•••••••
13	Flame sense electrode	S10037	•••••••
14	230V controls board	S10091	•••••••
15	User interface PCB	S10081	•••••••
16	Stepper motor (G20)	S57434	•••••••
17	Stepper motor (G30)	S57435	•••••••
18	Ignition unit	S57427	•••••••
19	**F24E only** Three way valve head	S57206	•••••••
20	Three way valve actuator	S10064	•••••••
21	Heat exchanger	S10030	•••••••
22	Burner	S10042	•••••••

Because of our constant endeavour for improvement details may vary slightly from those in the instructions.